BANK OF BARODA

Baroda Apex Academy

NOTICE INVITING TENDER FOR CIVIL & ALLIED EXTERNAL DEVELOPMENT WORK FOR BARODA APEX ACADEMY BUILDING, LAW GARDEN, AHMEDABAD.

Volume- II

Technical Specifications & Approved Make List

TECHNICAL SPECIFICATION OF CIVIL WORK

DISMANTLING AND DEMOLESHING:

Dismantling of Existing compound wall :

Item No. : 1

Demolishing Brick work with or without plastering work including all related R.C.C. / P.C.C. / Foundation work, if any, manually/ by mechanical means including buy back of serviceable material and disposal of all dismentled materials with all lead and lift as per direction of Engineer - in- charge.

1.0 TERMINOLOGY

(i) **Deconstruction** – Means a selective demolition in which salvage, reuse and recycling of demolished structure is maximized. The term 'Dismantling' implies carefully separating the parts without damage and removing. This may consist of dismantling one or more parts of thebuilding as specified or shown on the drawings.

(ii) **Demolition**: The term 'Demolition' implies breaking up. This shall consist of demolishing wholeor part of work either manually or using mechanical force (various equipment) or by implosionusing explosion, including all relevant items as specified or shown on the drawings.

1.1 GENERAL

This chapter relates to buildings only.

1.1.1 Precautions

All materials obtained from dismantling or demolition shall be the property of the Government unless otherwise specified and shall be kept in safe custody until they are handed over to the Engineer-in-Charge/ authorized representative.

1.1.1.1 The demolition shall always be well planned before hand and shall generally be done in reverseorder of the one in which the structure was constructed. The operations shall be got approved from the Engineer-in-Charge before starting the work.Due care shall be taken to maintain the safety measures prescribed in IS 4130 and construction and demolition waste management rules 2016 shall be followed.

1.1.1.2 Necessary propping, shoring and or under pinning shall be provided to ensure the safety of the adjoining work or property before dismantling and demolishing is taken up and the work shall be carried out insuch a way that no damage is caused to the adjoining work or property. Wherever specified, temporary enclosures or partitions and necessary scaffolding with suitable double scaffolding and proper cloth covering shall also be provided, as directed by the Engineer-in-Charge. It shall be ensured that no dust is generatedwhile demolishing. Demolition Rules – 2016 shall be followed.

1.1.1.3 Necessary steps shall be taken to keep noise and dust nuisance to the minimum. All work needsto be done under the direction of Engineer-in-Charge. Helmets, goggle, safety belts etc., should be used whenever required and as directed by the Engineer-in-Charge. The demolition work shall be proceeded with insuch a way that it causes the least damage and nuisance to the adjoining building and the public. Barricading shall be provided as per NGT guidelines.

1.1.1.4 Dismantling shall be done in a systematic manner. All materials which are likely to be damaged bydropping from a height or by demolishing roofs, masonry etc. shall be carefully removed first. Chisels and cutters may be used carefully as directed. The dismantled articles shall be removed manually or otherwise,lowered to the ground (and not thrown) and then properly stacked as directed by the Engineer-in-Charge.

1.1.1.5 Where existing fixing is done by nails, screws, bolts, rivets, etc., dismantling shall be done by taking out the fixing with proper tools and not by tearing or ripping off.

1.1.1.6 The contractor shall maintain/disconnect existing services, whether temporary or permanent, whereverrequired by the Engineer-in-Charge.

1.1.1.7 No demolition work should be carried out at night especially when the building or structure to be demolished is in an inhabited area.

1.1.1.8 Appropriate screens shall be placed where necessary to prevent injuries due to falling pieces.

1.1.1.9 Water spray shall be used to reduce dust while tearing down plaster from brick work.

1.1.1.10 Safety belts shall be used by labourers while working at higher level to prevent falling from the structure. Wherever, possible mechanized working platform shall be used.

1.1.1.11 First-aid equipment shall be made available at all demolition works of any magnitude.

1.2 In-situ Reinforced Concrete

1.2.1 Before commencing demolition, the nature and condition of the concrete, the condition and position of reinforcement, and the possibility of lack of continuity of reinforcement should be ascertained.

1.2.2 Attention should be paid to the principles of the structural design to determine which parts of the structure depend on each other to maintain overall stability.

1.2.3 Demolition should be commenced by removing partitions and external non-load bearing cladding. It should be noted that in some buildings the frame may rely on the panel walls for stability.

1.2.4 Where hard demolition methods are to be used, the following procedures should be used.

- Reinforced Concrete Beams

  For beams,a supporting rope should be attached of preferably at two or three locations to the beam. Then the concrete should be removed from both ends by pneumatic drill and the reinforcement exposed. The reinforcement should then be cut in such a way as to allow the beam to be lowered under control to the floor (see Fig. 15.3A).

- Reinforced Concrete Columns

  For columns, the reinforcement should be exposed at the base after restraining wire guy ropes have been placed round the member at the top. The reinforcement should then be cut in such a way as to allow the column to be pulled down to the floor under control. (see Fig. 15.3B for sequence of operations).

1.2.5 No demolition work should be carried out at night especially when the building or structure to

be demolished is in an inhabited area.

1.2.6 Appropriate screens shall be placed where necessary to prevent injuries due to falling pieces.

1.2.7 Water spray shall be used to reduce dust while tearing down plaster from brick work.

1.2.8 Safety belts shall be used by labourers while working at higher level to prevent falling from the structure. Wherever, possible mechanized working platform shall be used.

1.2.9 First-aid equipment shall be made available at all demolition works of any magnitude.

1.3 MEASUREMENTS

1.3.1 All work shall be measured net in the decimal system, as fixed in its place, subject to the following limits, unless otherwise stated hereinafter.

(a) Dimensions shall be measured correct to a cm.

(b) Areas shall be worked out in sqm correct to two places of decimal.

(c) Cubical contents shall be worked out to the nearest 0.01 cum.

1.3.2 Parts of work required to be dismantled and those required to be demolished shall be measured separately.

1.3.3 Measurements of all work except hidden work shall be taken before demolition or dismantlingand no allowance for increase in bulk shall be allowed.

1.3.4 Specifications for deduction for voids, openings etc. shall be on the same basis as that adopted for new construction of the work.

1.3.5 Work executed in the following conditions shall be measured separately.

- Work in or under water and/or liquid mud
- Work in or under foul position.

1.4 Rates

The rate shall include the cost of all labour involved and tools used in demolishing and dismantling including scaffolding. The rate shall also include the charges for separating out and stacking the serviceable material properly and disposing off unserviceable material with all lead and lift. The rate shall also include for temporary shoring for the safety of portions not required to be pulled down, or of adjoining property, and providing temporary enclosures or partitions, where considered necessary.

Rate considered for payment per RMT:

Item No. : 2.

Demolishing brick work manually/ by mechanical means including disposal of serviceable / unserviceable material with all lead as per direction of Engineer-in-charge.

Specification same as above Item No. - 1

Rates

The rate shall include the cost of all labour involved and tools used in demolishing and dismantling including scaffolding. The rate shall also include the charges for separating out and stacking the serviceable material properly and disposing off unserviceable material with all lead and lift. The rate shall also include for temporary shoring for the safety of portions not required to be pulled down, or of adjoining property, and providing temporary enclosures or partitions, where considered necessary.

Item shall be measured in CUM and paid per CUM :

Item No. : 3.

Demolishing R.C.C. work by mechanical means and stockpiling at designated locations and disposal of dismantled materials up to all lead, stacking serviceable and unserviceable material separately including cutting reinforcement bars.

Specification same as above Item No. 1

Rates

The rate shall include the cost of all labour involved and tools used in demolishing and dismantling including scaffolding. The rate shall also include the charges for separating out and stacking the serviceable material properly and disposing off unserviceable material with all lead and lift. The rate shall also include for temporary shoring for the safety of portions not required to be pulled down, or of adjoining property, and providing temporary enclosures or partitions, where considered necessary.

Item shall be measured in CUM and paid per CUM :

SOIL STRUCTURE :

Item No. 4 :

PILE WORK : Boring with hydraulic piling rigs with power units, providing and installing cast in situ single under reamed piles of specified diameter and length below pile cap in M-25 cement concrete, to carry a safe working load not less than specified, excluding the cost of steel reinforcement but including the cost of boring with bentonite solution and the length of the pile to be embedded in pile cap etc. all complete. (Length of pile for payment shall be measured upto to the bottom of pile cap) : 450 MM DIA.

Specification as per CPWD Item No. 20.3 below :

20.0 TERMINOLOGY

Allowable Load: It is load which is applied to a pile after taking into account its ultimate load capacity,pile spacing, Overall bearing capacity of the ground, the allowable settlement, negative skin friction including reversal of loads.

Bearing Pile: A pile formed in the ground for transmitting load of a structure to the soil by the resistance developed at its tips and or along its surface. It is either vertical or batter pile. It may be 'End bearing pile' or friction pile if it supports the load primarily along the surface.

Board Compaction Pile: It is bored cast- in-situ with or without bulb. In this compaction of surrounding ground and freshly filled concrete in pile, bore is simultaneously achieved by suitable method. A pile with a bulb is called a "under-reamed bored compaction pile". Under-reamed pile with more than onebulb is called Multi-under-reamed pile.

Constant Rate of Penetration (CRP) Test: The ultimate bearing capacity of preliminary piles and piles which are not used as working piles.

Constant Rate of Uplift (CRU) Test: The ultimate capacity in tension of preliminary piles and piles which are not used as working piles.

Cut of Level: It is the level where the installed pile is cut off to support the pile caps or beams.

Datum Bar: A rigid bar placed on immovable supports.

Draft Bolt: A metal rod driven into hole bored in timber, the hole being smaller in diameter than the rod.

Drop of Stroke: The distance through which the driving weight is allowed to fall for driving the piles.

Factor of Safety: It is the ratio of the ultimate load capacity of a pile to the safe load of a pile.

Follower Tube: A tube which is used following the main casing tube and it requires to be extended further. The inner diameter of the follower tube should be the same as the inner diameter of casing. The follower tube shall preferably be an outside guide and should be water tight when driven in water-bearing strata or soft clays.

Initial Test: This test is carried out with a view to determine ultimate load capacity and safe load capacity.

Raker or Batter Pile: The pile which is installed at an angle to the vertical. Raker piles are normally provided where vertical piles cannot resist the required applied horizontal forces. The maximum raketo be permitted in piles shall not exceed –

1 in 8 for cast-in-situ piles of large diameter viz. 750 mm dia,. and above. 1 in

5 for smaller dia. cast-on-situ piles.

1 in 4 pre-cast piles.

Routine Test: It is carried out with a view to check whether pile is capable of taking the working load assigned to it.

Safe Load: It is the load arrived at by applying a factor of safety to the ultimate load capacity of the pile.

Set: The net distance by which the pile penetrates in the ground due to stated number of blows of the hammer.

Spliced Pile: A pile composed of two or more lengths secured together, end to end to form one pile.

Test Pile: A pile which is selected for load testing and which is subsequently loaded for that purpose.This pile may form working pile itself if subjected to a routine load test with up to one and half time the safe load.

Total displacement (Gross): The total movement of the pile under a given load.

Total Elastic Displacement: This is the magnitude of the displacement of the pile due to rebound caused at the top after removal of given test load. This comprises two components as follows:

(a) Elastic displacement of the soil participating in load transfer; and
(b) Elastic displacement of the pile shaft.

Trial Piles: These are installed initially to assess the load carrying capacity, it is either tested to ultimate bearing capacity or twice the estimated safe load.

Ultimate Load Capacity: The maximum load which a pile can carry before failure of ground (whenthe soil fails by shear) or failure of pile materials.

Working Load: It is a load assigned to a pile as per design.

Working Pile: It is a pile forming part of foundation of a structural system.

20.1 DRIVEN CAST-IN-SITU REINFORCED CEMENT CONCRETE PILES

20.1.1 General

Cast -in-situ piles shall be installed by driving a metal casing with a shoe at the tip and displacingthe material laterally. Driven cast-in -situ pile is formed by driving a casing, permanent or temporary and subsequently filling the hole with plain or reinforced concrete.

20.1.2 Equipment

The equipment and accessories used for driven cast-in-situ piles shall depend on type of sub- soil strata, ground water conditions, type of founding material and penetration etc.

Commonly used plants are as per Appendix 'F' and few more are given below:

Dolly: A cushion of hardwood or some suitable material placed on the top of the casing to receive the blows of the hammer

Kentledge: Dead weight used for applying a test load to a pile.

Shoe: Pile Shoe should be of material as specified in the item. The pile shoes may be either cast iron or mild steel. Cast iron pile shoes shall be made from chill hardened iron as used for making grey iron casting confirming to IS 210. The chilled iron point shall be free from blow holes and other surface defects. Cast steel piles shoe shall be of steel conforming to IS 2644. Straps or other fastenings to cast pile shoes shall be of steel conforming to IS 1079 and shall be cast into the point to form an integral part of shoe. Different types of pile shoes are shown in Fig. 20.1

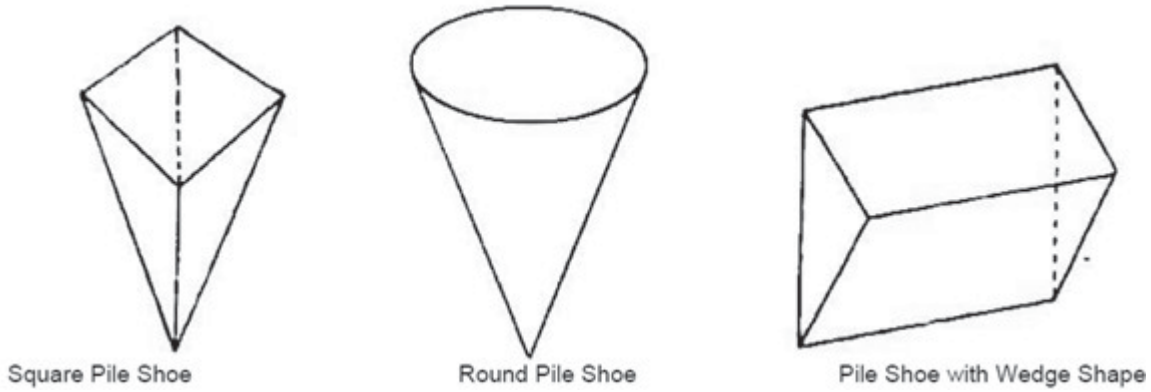

Fig. 20.1: Different Types of Pile Shoes

Drop Hammer (or Monkey): Hammer, ram or monkey raised by a winch and allowed to fall under gravity.

Single or Double Acting Hammer: A hammer operated by steam compressed air or internal combustion,the energy of its blows being derived mainly from source of motive power and not from gravity along.

Pile Frame (or Pile Rig): A movable steel structure for driving piles in the correct position and alignment by means of a hammer operating in the guides or (leaders) of the frame.

20.1.3 Pile Driving

20.1.3.1 ***Installation of Piles:*** Installation of piles shall be as accurate as possible and as per design and drawings. The **verticality** or the required batter should be correctly maintained. Particular care shall be takenin respect of installing either single pile or piles in two pile groups.

20.1.3.2 Deviation /Tolerance

(i) The deviation/tolerance should be as per IS 2911 (Part 1/Sec.1). The piles should not deviate more than 75 mm or D/4 whichever is less (75 mm or D/10 whichever is more in case of piles having diameter more than 600 mm) from their designed position at the working level.

(ii) In case of a single pile under a column, the positional deviation should not be more than 50 mm or D/4 whichever is less (100 mm in case of piles having diameter more than 600 mm. Greater tolerance may be prescribed for piles driven over water and for raking piles.

20.1.3.3 ***Sequence of Installation:*** Normal sequence of installation of pile group is from the centre to the periphery of the group or from one side to the other. Particular care shall be taken to avoid damaging the already cast pile while driving a fresh tube nearby before the concrete has sufficiently set. The possibility ofthe pile getting damaged is more in compact soils than in loose soils.

20.1.3.4 Driving a Group of Friction Piles

(i) The skin friction increases considerably when the pile bore is driven in the loose sand as the pile tends to compact the sand. Therefore in such cases the order of installation shall be altered so thata compact block is not created where driving further pile bore will not be possible. Similar precautionwill have to be taken where stiff clay or compact sand layers will have to be penetrated.

(ii) However driving the pile bore from centre outwards or commencing at a particular selected edge or even working across the group the problem pointed out in Para (I) above can be avoided.

(iii) In case of very soft soil it is advisable to start driving the bore hole from outside to inside so that the soil gets restrained from flowing out during operation.

20.1.3.5 Procedure of Pile Driving

(i) Driven cast-in-situ concrete piles are installed by driving a metal casing with a shoe at the tip/toe and displacing the material laterally.

(ii) These piles may be cast in metal shells which may remain permanently in place or the casing may be withdrawn which may be termed as uncased driven cast-in-situ cement concrete piles.

(iii) The metal casing shall be of sufficient thickness and strength to hold in original form and show no harmful distortion when the adjacent casing is driven and the driving core if any is withdrawn.

(iv) Driven cast-in-situ concrete piles shall be installed using a properly designed detachable shoe at the bottom of the casing.

(v) Any liner or bore hole; which is temporarily located and shows partial collapse that would affect the load carrying capacity of the pile, shall be rejected or repaired as directed by the Engineer-in-Charge.

20.1.3.6 A proper record of pile driving and other details such as depth driven, sequence of installation in a group, cut off level/working level shall be mentioned in sequence of occurrence worksheet for the inspection of Engineer-in-charge.

20.1.4 Jetting

(i) Driving of pile may be assisted by preboring holes or by the use of jets or both subject to the approval of the Engineer-in-charge. These may be used essentially to achieve the minimum penetration shown on the drawings where such penetration is not reached under normal

conditions of driving. The diameter of the hole shall; not be greater than the diagonal dimension of the pile less 100 mm.

(ii) The maximum depth of the preboring shall be such that the specified set (or less) is obtained when the toe of the pile is at founding level. Preboring shall be as approved by the Engineer- in-charge and shall not extend beyond one metre above the founding level and the pile shall be driven to at least one metre below the prebored hole. To ensure that the pile is properly supported laterally in the hole, any space remaining around the pile at the ground level after driving is finished shall be backfilled with approved granular material.

(iii) When the water jetting is used at least two jets shall be attached to the pile symmetrically. The volume and pressure of water at the outlet nozzles shall be sufficient to freely erode material adjacent to the toe of the pile. The maximum depth of jetting shall be such that thespecified set is obtained when the toe of the pile is at founding level. Jetting shall cease as directed by the Engineer-in-Charge and shall not proceed beyond one metre above the founding level and the pile shall be driven at least one metre below the prebored hole.

(iv) To avoid very hard driving and vibration in materials such as sand, jetting of piles by means of water may be carried out in such a manner as not to impair the bearing capacity of piles already in place, the stability of the soil or the safety of any adjoining buildings. Details of arrangement for jetting shall be got approved from the Engineer-in-Charge in advance.

(v) If large quantities of water are used for jetting it may be necessary to make provision for collection of water when it comes to the ground surface so that the stability of the piling plant is not endangered by the softening of the ground. Jetting shall be stopped before completing the driving which shall always be finished by ordinary methods. Jetting shall be stopped if there is any tendency for the pile tips to be drawn towards the pile already driven owing to the disturbance to the ground.

20.1.5 Reinforcement

(i) The design of reinforcing cage varies depending upon the driving and installation conditions, the nature of the sub-soil and the nature of load to be transmitted by the shaft, axial or otherwise. The minimum area of longitudinal reinforcement of any type or grade within the pile shaft shall be 0.4 per cent of the sectional area calculated on the basis of the outside area of the casings of the shaft.

(ii) The curtailment of reinforcement along the depth of the pile, in general, depends on the type of loading and sub-soil strata. In case of piles subjected to compressive load only, the designed quantity of reinforcement may be curtailed at appropriate level according to design requirements. For piles subjected to uplift load, lateral load & moments, separately or with compressive loads, it may be necessary to provide reinforcement to the full depth of the pile. In soft clays or loose sands, or where there is likelihood of danger to green concrete due to driving of adjacent piles, the reinforcement should be provided up to full pile depth, regardless of whether or not it is required from uplift & lateral load considerations. However, in all cases, the minimum reinforcement specified in Para (i) above should be provided in full length of the pile.

(iii) Piles shall always be reinforced with a minimum amount of reinforcement as dowels keeping the minimum bond length into the pile shaft below its cut-off level, and with adequate projectioninto the pile cap, irrespective of design requirements.

Note: In some cases the cage may lift at bottom or at the laps during withdrawal of casing. This can be minimized by making the reinforcement "U" shaped at the bottom and up to well secured joints. Also the lifting 5 percent of the length should be considered not to affect thequality of pile.

(iv) Clear cover to all main reinforcement in pile shaft shall be not less than 50 mm and shall be maintained by suitable spacers. The laterals of reinforcing cage may be in the form of links or spirals. The diameter and spacing of the same is chosen to impart adequate rigidity of the reinforcing cage during the handing and installation. The minimum diameter of links or spirals

shall be 6 mm and the spacing of the links or spirals shall be not less than 150 mm. The minimum clear distance between two adjacent main reinforcement should normally be 100 mm for full depth of the cage.

(v) The reinforcing cage should be left with adequate protruding length above the cut off level for proper embedment in the pile cap. Prior to the lowering of reinforcement cage into the pile shaft, the shaft shall be cleaned of all loose materials.

(vi) Reinforcement in the form of cage shall be assembled with additional support, such as spreader forks and lacings; necessary to form a rigid cage hoops, links, or helical reinforcement has to fit closely around the main longitudinal bars and shall be tied by binding wire of approved quality. The ends of the binding wire shall be turned into the interior of the pile. Reinforcement shall be placed and maintained in correct position. The reinforcements shall be joined wherever necessary by welding and the procedure of welding be followed as described in IS 2751.

20.1.6 Concrete

20.1.6.1 ***Cement*** : Cement shall be as specified in agreement item or as specified under sub-head 3.0 of CPWD Specifications. However, high alumina cement shall not be used.

20.1.6.2 ***Water:*** Water to be used for concreting shall be as specified under sub-head 3.0 of CPWD Specifications.

20.1.6.3 ***Fine Aggregate:*** Fine aggregate to be used for concreting shall be as specified under sub- head 3.0 of CPWD Specifications.

20.1.6.4 ***Coarse Aggregate:*** For tremie concreting, coarse aggregate having nominal size more than 20 mm should not be used. Natural rounded shingle of appropriate size may also be used as coarse aggregate. It helps to give high slump with less water cement ratio.

20.1.6.5 ***Chemical Admixtures:*** Admixtures to be used in the concrete shall be as per IS 9103.

20.1.6.6 Concrete Grades to be adopted

(i) Concreting of piles shall be done only with design mix of appropriate grade with weigh batching of constituents. The grade of concrete to be kept as per nomenclature of the item.

(ii) Only concrete Grade M-25 and/or higher grades shall be used for concreting the piles.The exact grade of concrete to be used shall mainly depend upon the nature of work and the general design consideration. However, Concrete Grade M-15 and Grade M-20 shall not be used for concreting piles under any circumstances, even with weigh batching. The minimum cement content shall be 400 kg/m^3 in all conditions. **Even though cement content can be reduced by use of properly designed mixes or admixtures, but the cement content should not be less than 350 kg/cum.**

(iii) When concreting under water or drilling mud 10 per cent additional cement over the minimum cement content for the particular grade shall be used.

20.1.6.7 ***Workability of Concrete:*** The minimum slump shall be 100 mm when the concrete for the piles is being vibrated and when the concrete is not vibrated the maximum permitted slump **should be150mm to 180mm at the time of pouring**. The degree of workability in both the cases is considered as very high.

20.1.6.8 Placing of Concrete

(i) Before commencement of pouring of concrete, it shall be ensured that there is no ingress of water in the casing tubes from bottom. Further, adequate control during withdrawal of the casing tube is essential so as to maintain sufficient head of concrete inside the casing tube at all stages of withdrawal.

(ii) Wherever practicable concrete should be placed in a clean dry hole where concrete is placed in dry hole and when casing is present, the top 3 m pile shall be compacted using internal vibrators. The concrete should invariably be poured through a tremie, with a funnelso that the flow is directed and concrete can be deposited in the hole without segregation. Care shall be taken during concreting to prevent as far as possible the segregation of the ingredients. The displacement or distortion of reinforcement during concreting and also while extracting the tube shall be avoided.

(iii) Where the casing is withdrawn from cohesive soils for the formation of cast-in-situ pile, the concreting should be done with necessary precautions to minimize the softening of the soil by excess water. Where mud flow conditions exist, the casing of cast-in-situ piles shall not be allowed to be withdrawn.

(iv) The concrete shall be self compacting and shall not get mixed with soil, excess water, or other extraneous matter. Special care shall be taken in silt clays and other soils with tendencyto squeeze into newly deposited concrete and cause necking. Sufficient head of green concrete shall be maintained to prevent inflow of soil or wager into concrete. The placing ofconcrete shall be continuous process from the toe level to the top of pile to prevent segregation, a tube of tremie pipe ass appropriate shall be used to place concrete in all piles. To ensure compaction by hydraulic static heads, rate of placing concrete in the pile shaft shall not be less than 6 m (length of pile) per hour.

(v) The diameter of the finished pile shall not be less than specified and a continuous record shall be kept by the Engineer as to the volume of concrete placed in relation to the length of pile cast. Aftereach pile has been cast and any empty pile hole remaining shall be protected and back filled assoon as possible with approved material.

(vi) The minimum embedment of cast-in-situ concrete piles into pile cap shall be 150 mm. Any defective concrete at the head of the completed pile shall be cut away and made good with new concrete. The clear cover between the bottom reinforcement in pile cap from top of pile shall not be less than 30 mm. The reinforcement in the pile shall be exposed for full anchorage length to permit it to beadequately bonded into the pile cap. Exposing such length shall be done carefully to avoid damagingthe rest of the pile. In cases where the pile cap is to be laid on ground a leveling course with cementconcrete of Grade M-15 and of 100 mm thickness shall be provided.

(vii) Normally concreting of piles should be uninterrupted. In exceptional case of interruption of concreting, but which can be resumed within 1 or 2 hours, the tremie shall not be taken out of the concrete. Instead it shall be raised and lowered slowly from time to time to prevent the concrete around thepipe from setting. Concreting should be resumed by introducing a little richer concrete with a slumpof about 200 mm for each displacement of the partly set concrete. If the concreting cannot be resumed before final set of concrete already laid, the pile so cast may be rejected.

(viii) In case of withdrawal of tremie out of concrete, either accidentally or to removed a choke in the tremie, the tremie may be re-introduced to prevent impregnation of laitance scum lying on the top of the concrete already deposited in the bore. The tremie shall be gently lowered on to the old concretewith very little penetration initially. A vermiculite plug should be introduced in the tremie. Fresh concrete of slump between 150 mm and 175 mm should be filled in the tremie which will push the plug forward and swill emerges out of the tremie displacing the laitance/scum. The tremie will be pushed further in steps masking fresh concrete sweep away laitance scum in its way. When thetremie is buried by about 60 to 100 cms, concreting may be resumed.

(ix) The top of concrete in a pile shall be brought above the cut-off level to permit removal of all laitanceand weak concrete before capping and to ensure good concrete at the cut-off level for proper embedment into the pile cap.

(x) Where cut-off level is less than 1.5 metres below the working level concrete shall be cast to a minimum of 300 mm above cut-off level. For each additional 0.3 m increase in cut-off level below the working level additional coverage of 50 mm minimum shall be allowed. Higher allowance may be necessary depending on the length of the pile. When concrete is placed by tremie method concreteshall be cast to the piling platform level to permit overflow of concrete for visual inspection or to a minimum of one metre above cut off level. In the circumstances where cut-off level is below ground water level the need to maintain pressure on the unset concrete equal to or greater than water pressure should be observed and accordingly length of extra concrete above cut-off level shall be determined.

20.1.6.9 Placing Concrete under Water

(i) Before concreting under water, the bottom of the hole shall be cleared of drilling mud and all soft loose materials very carefully. In case a hole is bored with use of drilling mud, concreting should notbe taken up when the specific gravity of bottom slurry is more than 1.2. The drilling mud should be maintained at 1.5 m above the ground water level. Concreting under water for cast-in-situ concretepiles may be done either with the use of tremie method or by the use of approved method specialty designed to permit under water placement of concrete. General requirements and precautions for concreting under water are as follows:

(a) The concreting of pile must be completed in one continuous operation. Also for bored holes,the finishing of the bore, cleaning of the bore, lowering of reinforcement cage and concretingof pile for full length must be accomplished in one continuous operation without any stoppage.

(b) The concrete should be coherent, rich in cement with high slump & restricted water cement ratio.

(c) The tremie pipe will have to be large enough with due regard to the size of the aggregate. For 30 mm aggregate the tremie pipe should be of diameter not lessthan 150 mm and for larger aggregate, larger diameter of tremie pipe may be necessary.

(d) The first charge of concrete should be placed with a sliding plug pushed down the tube ahead of it to prevent mixing of water and concrete.

(e) The tremie pipe should always penetrate well into the concrete with an adequate margin of safety against accidental withdrawal if the pipe is surged to discharge the concrete.

(f) The pile should be concentrated wholly by tremie and the method of deposition should not be changed part way up the pile to prevent the laitance from being entrapped within the pile.

(g) All tremie tubes should be scrupulously cleaned after use.

When concreting is carried out under water a temporary casing should be installed to the full depth of the bore hole or 2 m into non collapsible stratum, so that fragments of ground cannot drop from the sides of the hole into the concrete as it is placed. The temporary casing may not be required except near the top when concreting under drilling mud.

20.1.7 Testing of Concrete

20.1.7.1 The concrete for the piles shall be sampled in accordance with the norms specified in IS 456.

The frequency of sampling is given in Table 20.1.

TABLE 20.1

Quantity of Concrete in the Work m³	*Number of Samples*
1-5	1
6-15	2
16-30	3
31-50	4
51 and above	4 plus one additional sample for each additional 50m³ or part thereof.

Notes:

(i) At least one sample shall be taken from each shift.

(ii) Where concrete is produced as continuous production unit, such as ready mix concrete plant. The frequency of sampling may be agreed upon mutually by suppliers and purchasers.

20.1.7.2 ***Test Specimen:*** Three test specimens shall be made for each sample for testing at 28 days. Additional samples may be required for various purposes such as to determine the strength of concrete at 7 days or to determine the duration of curing, or check the testing error, additionalsample may also be required for testing samples cured by accelerated methods as described in IS 9103. The specimen shall be tested as described in IS 516.

20.1.7.3 ***Test Results of Samples:*** The test results of the samples shall be the average of the strength of three specimens. The individual variation should not be more than ±15% percent of the average strength. If the variation is more, the test result of the sample is invalid.

20.1.8 Curing

As per IS 456 – 2000, exposed surfaces of concrete shall be kept continuously in a damp or wet condition by ponding or by covering with a layer of sacking, canvas, Hessian or similar materials andkept constantly wet for at least 10 days from the date of placing concrete. The period of curing shall not be less than 14 days for concrete exposed to dry and hot weather conditions.

20.1.9 Defective Pile

(i) In case defective piles are formed they shall be removed or left in place whichever is convenient without affecting performance of the adjacent piles or cap as a whole. Additional piles shall be provided to replace them as directed.

(ii) Any deviation from the designed location alignment or load capacity of any pile shall be noted and adequate measures taken well before concreting of the pile cap and plinthbeam, if the deviations are beyond permissible limit.

(iii) During chipping of the pile, top manual chipping may be permitted after three days of pile casting pneumatic tools for chipping shall not be used before seven days after pile casting.

(iv) After concreting the actual quantity of concrete shall be compared with average obtained from observations actually made in the case of a few piles initially cast. If the actual quantity is found to be considerably less, special investigations shall be conducted and appropriate measures taken.

20.1.10 Ready Mix Concrete (RMC)

Alternatively, the contractor can be allowed to use Ready Mix Concrete (RMC) with the permission of Engineer-in- Charge, provided that the manufacturer assures that for RMC supplied for the particular work contains the minimum cement content and it is in conformity of approved design mix. The manufacturer of RMC has also to agree to the sampling and testing procedure as specified under clause 20.1.7 or alternatively he can propose his own sampling and testing procedure which should in turn be approved by the Engineer-in -Charge. Normally, RMC supplied to site are mixed with certain admixtures which enables the concrete to be used within 3 hours of supply at site. In case RMC supplied is not consumed within 3 hours of supply the quantity of RMC remaining unused beyond 3 hours shall be rejected and removed from site.

20.1.11 Measurement

Dimension shall be measured nearest to a cm. Measurement of length on completion shall be along the axis of pile and shall be measured from top of shoe to the bottom of pile cap. No allowanceshall be made for bulking, shrinkage, cut off tolerance, wastage and hiring of tools and equipment forexcavating driving etc.

20.1.12 Rate

The rate includes the cost of materials and labour involved in all the operations described above including pile embedded in pile cap, except soil investigation, reinforcement, pile cap and grade beam.

20.2 BORED CAST-IN-SITU REINFORCED CONCRETE PILES

20.2.1 General

The piles are formed within the ground by excavating or boring a pile within it with or without the use of temporary casing and subsequently filling it with plain or reinforced concrete. When thecasing is left permanently it is termed as cased pile and when the casing is taken out it is termed as uncased pile.

20.2.2 Equipment

The equipment and accessories used for bored cast-in-situ piles shall depend on subsoil strata, ground water conditions, type of founding material and penetration etc.

General requirements of boring equipment are as per Appendix 'D'. The equipment is applicable for boredpiles without the use of bentonite.

20.2.2.1 Boring operation shall be done by rotary percussion type drilling rigs using direct mud circulation or reverse mud circulation methods to bail out the cuttings or as specified. In soft clays and loose sand, bailerand chisel method should be used with caution to avoid the effect of suction. Rope operated grabbing toolKelly mounted hydraulically operated grab are also used. This method of advancing the hole avoids suction. The size of cutting tool shall be as per [IS 2911 (Part I Section 2)] and not less than the diameter of pile bymore than 75 mm.

20.2.2.2 Use of drilling mud is stabilizing sides of bore hole where specified shall have properties as definedin Appendix A.

Permanent casing where specified shall be used to avoid aggressive action of water.

20.2.3 Boring for installing Pile

20.2.3.1 ***Installation of Piles :*** As described under clause 20.1.3.1

20.2.3.2 ***Deviation and Tolerance :*** As described under clause 20.1.3.2.

20.2.3.3 Procedure of Driving Pile Bore

(i) Bored cast-in-situ concrete piles are installed by making a bore into the ground and removing out the material.

(ii) The ground shall be roughly leveled and position of pile marked. The boring shall be done with or without the use of temporary casing. The sides of bore hole; shall be stabilized with the aid of temporary casing or with the aid of drilling mud of suitable consistency.

(iii) The equipment and accessories shall depend upon the type of bored pile chosen for the job, consideration of sub-soil strata, ground water condition, type of founding material. Boring operation normally are done by rotary or percussion type drilling rigs using direct mud circulation on reverse mud tool shall be as detailed in IS 2911 (Part 1/Sec.2).

(iv) In case permanent/temporary casing is not used then bored pile is stablised with drilling fluid. Bentonite supplied to site shall conform to IS 2720 (Part V).A certificate shall be obtained by the contractor fromthe manufacturer showing properties of each consignment and should be submitted to the Engineer- in-charge. Bentonite shall be mixed thoroughly with fresh clean water to make a suspension which will maintain the stability of the pile excavation for the period necessary to place concrete and complete construction. The temperature of the water used in mixing the bentonite suspension and when supplied to bore hole shall not be lower than 5ºC. Consistency of the drilling fluid suspension and when controlled throughout the boring as well as in concreting operations in order to keep the hole stabilizedas well as to avoid concrete getting mixed up with thick suspension of mud.

Frequency and methods of testing drilling fluid shall be as specified and the test results shall be as specified in IS 2720 (Part V).

(v) Bored cast-in-situ piles in soils which are stable may often be installed with a small casing length at the top. A minimum of 2.0 m length of top of bore shall; invariably be provided with casing to ensure against loose soil falling in to drilling mud, or a suitable steel casing. The casing may be left in place permanently especially in cases where the aggressive action of the ground water is to be avoided, or in the cases of piles built in water or in cases where significant length of piles could be exposed due to scour.

(vi) For bored cast-in-situ piles, casing/liner shall be driven open ended with a pile driving hammer capable of achieving penetration of the liner to the length shown on the drawing oras directed by the Engineer-in-charge. Materials inside the casing shall be removed progressively by air lift, grap or percussion equipment or other approved means.

(vii) Where bored cast-in-situ piles are used in soils liable to inflow, the bottom of the casing shall be kept low enough in advance of the boring tool; to prevent the entry of soil into the casing, thus presenting the formation of settlements in the adjoining ground. The water level in the casing should generally be maintained at the natural ground water level for the same reasons. The joints of the casing shall be made as tight as possible to minimize inflow of water or leakage of slurry during concreting.

(viii) Boring shall be carried out using rotary or percussion type equipment. Unless otherwise directed by the Engineer-in-charge the diameter of the bore holes shall be not more than the inside diameter of the liner.

(ix) After the boring has reached the required depth, the steel reinforcement shall be lowered in position maintaining the specified size of cover on all sides. The bore shall then be flushed with bentonite slurry and concreting shall be taken up exactly as described under clause 20.1.6.8.

20.2.3.4 A proper record of pile driving and other details such as sequence of installation of piles, dimension of piles, depth bored, time taken for concreting etc. shall be maintained in sequence of occurrence at site as per clause 20.1.3.6.

While drilling mud is used, the specific gravity of fresh supply and contaminated mud in the hole before concreting is taken up shall be recorded for first ten piles and subsequently at interval of 10 piles or as specified.

20.2.4 Reinforcement

As specified under clause 20.1.5.

20.2.5 Concrete

As specified under clause 20.1.6.

20.2.6 Ready Mix Concrete

As specified under clause 20.1.10.

20.2.7 Measurement

Dimensions shall be measured nearest to a cm. Measurement of length on completion shall be along the axis of pile and shall be measured up to the bottom of pile cap. No allowance shall be made for bulking, shrinkage, cut off tolerance, wastage and hiring of tools, equipment for excavating,driving etc.

20.2.8 Rate

The rate includes the cost of material and labour involved in all the operations described above including pile embedded in pile cap except reinforcement, pile cap and grade beam.

20.3 UNDER-REAMED RCC PILES

20.3.1 General

(i) Under-reamed piles are bored cast-in-situ and bored compaction concrete types having one or more bulbs formed by suitably enlarging the bore hole for the pile stem. With the provision of bulb(s) substantial bearing or anchorage is available.

(ii) These piles find application in widely varying situations in different types of soils where foundation are required to be taken down to a certain depth in view of considerations like the following requirements :

(a) To avoid the undesirable effect of seasonal moisture changes as in expansive soils.

(b) To reach firm strata.

(c) To obtain adequate capacity for downward, upward and lateral loads and moments

(d) To take foundations below scour level.

(iii) When the ground consists of expansive soil e.g. black cotton soil, the bulb of the underream pile provides anchorage against uplift due to swelling pressure apart from the increased bearing capacity.

(iv) In case of filled up or otherwise weak strata overlying the firm strata, enlarged base in the form of under-reamed bulb in firm strata provides larger bearing area and piles of greater bearing capacity can be made.

(v) In loose to medium pervious sandy silty strata, bored compaction piles can be used as the process of compaction increases the loads bearing capacity of the piles.

(vi) Under- reamed piles may also be used under situations where the vibration and noise caused during construction of piles are to be avoided. The provision of bulb(s) is of special advantage in under reamed piles to resist uplift and they can be used as anchors.

20.3.2 Pile Grouping

(i) For bored cast in situ under-reamed piles at usual spacing of 2 Du **(DU is bulb diameter),** the group capacity will be equal to the safe load of individual pile multiplied by the number of piles in the group. For piles at spacing of 1.5 Du the safe load assigned per pile in a group should be reduced by 10 per cent.

(ii) In under-reamed compaction piles, at the usual spacing of 1.5 Du, the group capacity will be equal to the safe load on individual pile multiplied by the number of piles in the group.

Note: In order-reamed compaction piles, the capacity of the group may be more thangiven in Para (i) above on account of compaction effect.

(iii) In non-expansive soils, when the cap of the pile group is cast directly on a reasonably firm stratum it may additionally contribute towards the bearing capacity of the group.

(iv) In load bearing walls piles should generally be provided under all wall junctions to avoid point loads on beams. Position of intermediate piles is then decided by keeping door openings fall in between two piles as far as possible.

20.3.3 Equipment and Other Accessories

(i) The selection of equipment and accessories will depend upon the type of under-reamedpiles, site conditions and nature of strata. Also it will depend on economic considerationsand availability of manually or power operated equipment.

(ii) A typical list of equipment for manual construction is given in Appendix B.

(iii) Bore holes may be may be made by earth augers. In case of manual boring, an augerboring guide shall be used to keep bores vertical or to desired inclination and in position. After the bore is made to the required depth, enlarging of the base shall be carried out by means of an under-reaming tool.

(iv) In ground with higher water table having unstable pile bores, boring and under-reaming may be carried out using suitable drilling mud. General guidelines for bentonite drilling mud are given in Appendix 'A'. In normally met soil strata, drilling mud can be poured from top while boring and under-reaming can be done by normal spiral earth auger and under-reamer.

(v) The level of drilling mud should always be about one meter above water table or the level at which caving-in occurs. In case of very unstable strata with excessive caving-in continuous circulation of drilling mud using suitable pumping equipment and tripod, etc along with modified auger and under-reamer may be used.

(vi) Some times permeable strata overlying a rim clayey stratum may be cased and normal boring and under-reaming operation may be carried out in clayey stratum.

(vii) To avoid irregular shape and widening of bore hole in very loose strata at top a casing pipeof suitable length may be used temporarily during boring and concreting.

(viii) For improved control over the inclination of batter/raker piles a tripod hoist with fixed pulley should be used for lowering in of under-reaming tools.

(ix) For placing concrete in bore holes full of drilling mud or sub-soil water tremie pipe of not less than 150 mm diameter with flap valve at the bottom should be used.

(x) For batter/raked under-reamed piles the reinforcement cage should be placed guiding it by a chute or any other suitable method. If concreting is not done by tremie, it should be done by chute.

(xi) In under-reamed compaction piles, suitable device should be used for guiding the movementof drop weight and specified core assembly for its vertical driving for operating the drop weight and specified core assembly for its vertical driving for operating the drop weights of adequate capacity, suitable winch with hoisting attachment should be used.

20.3.4 Pile Boring

(i) Under-reamed piles may be constructed by selecting suitable installation techniques at given site depending on sub-soil strata conditions and type of under-reamed piles and number of bulbs.

(ii) In construction with equipment suggested under Appendix 'B' initially boring guide is fixed with its lower frame leveled for making desired angular adjustment for piles at batter/rake. Boring is done up to required depth and under-reaming is completed.

(iii) In order to achieve proper under-reamed bulb, the depth of bore hole should be checked before starting under reaming. It should also be checked during under-reaming and any extra soil at the bottom of bore hole; removed by auger before reinserting the under- reaming tool.

(iv) The completion of desired under-reamed bulb is ascertained by

(a) The vertical movement of the handle and

(b) When no further soil is cut.

(v) In double or multi under-reamed piles, boring is fist completed to the depth to the first (top) under-ream only and after completing the under-reaming boring is extended further for the second under-ream and the process is repeated.

20.3.4.1 Control of Alignment

(i) The piles shall be installed as correctly as possible at the correct location and truly vertical (or at the specified batter/inclination). Great care shall be exercised in respect of single pileor piles in two pile groups under a column.

(ii) As a guide for vertical piles a deviation of 1.5 per cent and for raker piles a deviation of four percent shall not normally be exceeded. In special cases, a closer tolerance may be necessary.

(iii) Piles shall not deviate more than 75 mm or one quarter the stem diameter, whichever is less (75 mm or D/10 whichever is more in case of piles having diameter more than 600 mm)from the designed position at the working level.

(iv) In case of single pile under a column the positional deviation should not be more than 50 mm or one quarter of the stem diameter whichever is less (100 mm in case of piles having diameter more than 600 mm).

(v) For piles where cut-off is at substantial depths, the design should provide for worst combination of the above tolerances in position and inclination.

(vi) In case of piles deviating beyond these limits corrective measures where necessary may betaken in the form of increasing pile size, provision of extras reinforcement in the pile, redesignof pile cap and pile ties. If the resulting eccentricity cannot be taken care of by the above measures, the piles should be replaced or supplemented by; one more additional piles.

20.3.5 Reinforcement in Piles

(i) The provision of reinforcement will depend on nature and magnitude of loads, nature of strata and method of installation. It should be adequate for vertical loads, lateral load and moments acting individually or in combination. It may be curtailed at appropriate depths only under the advice of the structural engineer. However, provision of reinforcement shall be as specified in drawing.

(ii) The minimum area of longitudinal reinforcement (any type or grade) within the pile shaft should be 0.4 per cent of the sectional area calculated on the basis of outside area of shaftor casing if used.

(iii) Reinforcement is to be provided in the full length irrespective of any other considerations and is further subject to condition that a minimum number of three 10 mm dia mild steel or three 8 mm dia high strength steel bars shall be provided. The transverse reinforcement ascircular stirrups shall not be less than 6 mm dia. Mild steel bars at a spacing of not more than the stem diameter or 30 cm, whichever is less.

(iv) For under reamed compaction piles, a minimum number of four 12 mm diameter mild steel or four 10 mm diameter high strength steel bars shall be provided.

(v) For piles of lengths exceeding 5 m and or 37.5 cm diameter, a minimum number of six 12 mm diameter HSD bars shall be provided.

(vi) For piles exceeding 40 cm diameter a minimum number of six 12 mm diameter high strengthsteel bars shall be provided.

(vii) The circular stirrups for piles of length exceeding 5 m and diameter exceeding 37.5 cm shall be bars of 8 mm diameter.

(viii) For piles subject to uplift loads, adequate reinforcement shall be provided to take full up lift which shall not be curtailed at any stage.

(ix) For piles up to 30 cm diameter, if concreting is done by tremie, equivalent amount of steel placed centrally, may be provided at sides.

(x) The minimum clear cover over longitudinal reinforcement shall be 50 mm. In aggressive environment of sulphates etc. it may be increased to 75 mm.

20.3.6 Concrete

20.3.6.1 ***Materials:*** Cement, water, fine aggregate, coarse aggregate and chemical admixtures etc. as described under clause 20.1.6.

20.3.6.2 ***Concrete grades to be adopted :*** Same as described under clause 20.1.6.6.

20.3.6.3 ***Workability of Concrete :*** Same as described under clause 20.1.6.7.

20.3.6.4 Placing of Concrete

(i) Same as Para (i) to (x) under clause 20.1.6.8.

(ii) Concreting shall be done as soon as possible after completing the pile bore. The bore hole full of drilling mud should not be left un-concreted for more than 12 to 24 hours depending upon the stability of the bore hole.

(iii) For placing concrete in pile bores, a funnel should be used and method of concreting should besuch the entire volume of the pile before is filled up without formation of voids and/or mixing of soiland drilling fluid in concrete.

(iv) In empty bore holes for under-reamed piles a small quantity of concrete is poured to give about 100mm layer of concrete at bottom. Reinforcement is lowered next and positioned correctly. Then concrete is poured to fill the bore hole. Care should be taken that soil is not scrapped from side ifrodding is done for compaction. Vibrators shall not be used.

(v) If water is confined up to the bucket length portion at the toe & seepage is low, the water should be bailed out and concreting should be done as prescribed in Para (iv) above.

(vi) In case the pile bore is stabilized with drilling mud or by maintaining water head within the bore hole, the bottom of bore hole shall be carefully cleaned by flushing it with fresh drilling mud and pile bore will be checked for its depth immediately before concreting.

(vii) Concreting shall be done by tremie method. The tremie should have a valve at bottom and loweredwith valve closed at the start and filled up with concrete. The valve is then opened so permit the flow of concrete which permits upward displacement of drilling mud.

(viii) The pouring should be continuous and tremie is gradually lifted up such that the tremie pipe opening remains always in the concrete. At the final stage the quantity of concrete in tremie should be enough so that on final withdrawal some concrete spills over the ground.

Note: (1) The concrete should be coherent, rich in cement (not less than 350 kg/m^3) and slump not less than 150 mm.

(2) The tremie pipe should always penetrate well into the concrete with an adequate margin of safety against accidental withdrawal if the pipe is surged to dischargethe concrete.

(ix) In inclined piles, concreting should be done through a chute or by tremie method.

(x) For under-reamed bored compaction piles, the pile bore is first filled up without placing any reinforcement. Concreting is done as prescribed in paras (iv) depending upon the situation. Soon after the specified core assembly shall be driven and extra concrete shall be poured in simultaneously to keep the concrete up to ground level. If hollow driving pipe is used in core assembly the pipe shall be withdrawn after filling it with fresh concrete which will be left behind.

20.3.6.5 Estimation of Concrete Quantity

(i) The extra quantity required for each bored cast-in-situ under-reamed bulb of 2.5 times the stem diametermay be taken equal to a stem length of 4 to 4.5 times its diameter, depending upon the nature of strata and other site conditions. The volume of concrete actually placed shall be observed in the case of quantities of the concrete and cement for the subsequent piles.

(ii) For under-reamed compaction piles the amount of concrete used is about 1.2 times of the under-reamed cast-in-situ piles.

Note: If the estimates of concrete consumption are on the volume of the bore holes and not on thebasis of concrete quantity actually consumed, the concrete used may be found lesser than estimatedand cement consumption may work out to be less.

20.3.6.6 ***Placing Concrete under Water*** **:** As described under clause 20.1.6.9.

20.3.6.7 ***Testing Works Concrete :*** As described under clause 20.1.7.

20.3.6.8 ***Curing :*** As described under clause 20.1.8.

20.3.6.9 ***Ready Mix Concrete (RMC) :*** As described under clause 20.1.10.

20.3.7 Pile Cap (Fig. 20.2 and 20.3)

(i) Pipe cap are generally designed considering pile reaction as either concentrated loads or distributed loads. The depth of pile cap should be adequate for the shear, diagonal tension and it should also provide the necessary anchorage of reinforcement both for the column and the pile.

(ii) The pile caps may be designed by assuming that the load from column or pedestal is dispersed at 45º from the top of the cap up to the mid depth of the pile cap from the based of the column or pedestal. The reaction from piles may also to be taken to be distributed at 45º from the edge of the pile, up to the mid depth of the pile cap on this basis, the maximumbending moment and shear forces should be worked out at critical sections.

(iii) Full dimension of the cap shall be taken as width to analyse the section for bending and shear in respective direction. Method of analysis and allowable stresses may be according to IS 456.

(iv) The clear overhang of the pile cap beyond the outermost pile in the group shall normally be100 to 150 mm depending upon the size of the pile.

(v) The cap is generally cast over a 75 mm thick leveling course of concrete. The clear cover for the main reinforcement of cap slab shall be not less than 75 mm.

(vi) The pile should project 50 mm into the cap concrete. The design of grade beams if used shall be as given in IS 2911 (Part III).

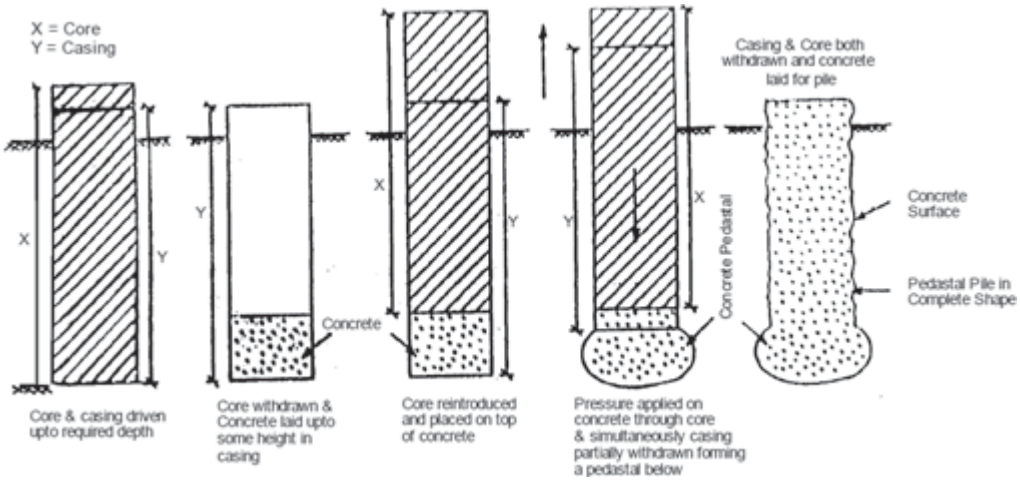

Fig. 20.2 : Pedestal Piles

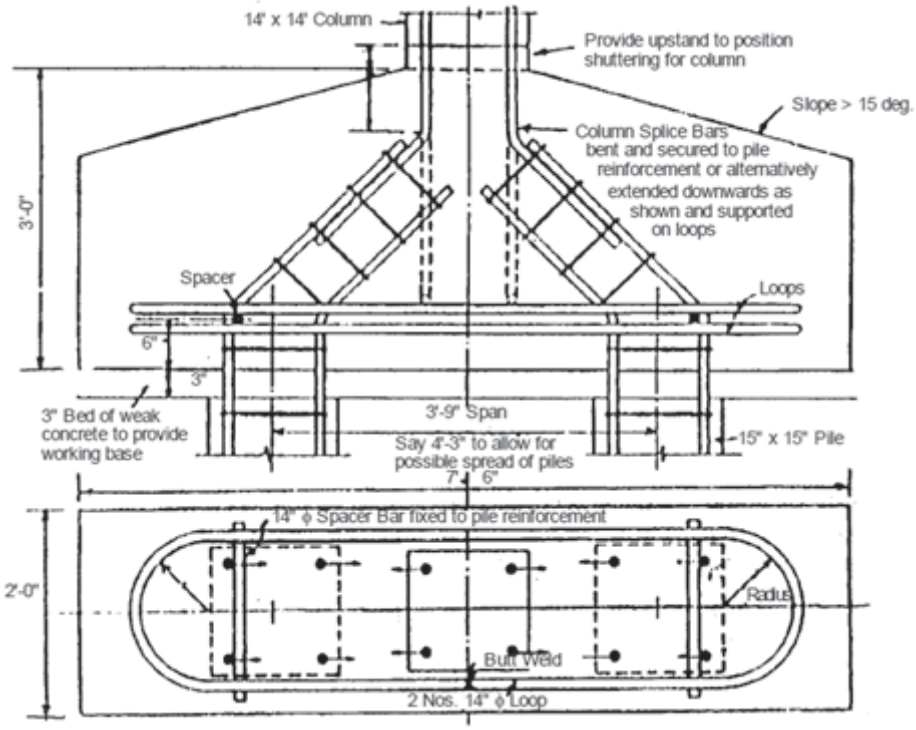

Fig. 20.3 : Cap for Two Piles (Typical)

20.3.8 Grade Beams

(i) The grade beams supporting the walls; shall be designed taking due account of arching effect due masonry above beam. The beam with masonry due to composite action behavesas a deep beam.

(ii) The minimum overall depth of grade beams shall be 150 mm. The reinforcement at bottom should be kept continuous in all the beams and an equal amount may be provided at top toa distance of quart span both ways from the pile centre.

(iii) The longitudinal reinforcement both at bottom and top should not be less than three bars of 10 m diameter mild steel (or equivalent deformed steel).

(iv) Stirrups of 6 mm diameter bars should be at 300 mm spacing which should be reduced to 100 m at the door openings near the wall edge to a distance of three times he depth of beam. No shear connectors are necessary in wall.

(v) In expansive soil the grade beam shall be kept a minimum of 80 mm clear off the ground. Inother soils, the beams may rest on ground over a leveling concrete course of about 80 mmas shown. In this case part load may be considered to be borne by ground and it may be accounted for; in the design of piles. However, the beams should be designed as usual.

(vi) In case of exterior beams over piles in expansive soils a ledge projection of 75 mm thickness an extending 80 mm into ground as shown shall be provided on outer side beam. Typical sections of internal and external beams are shown below.

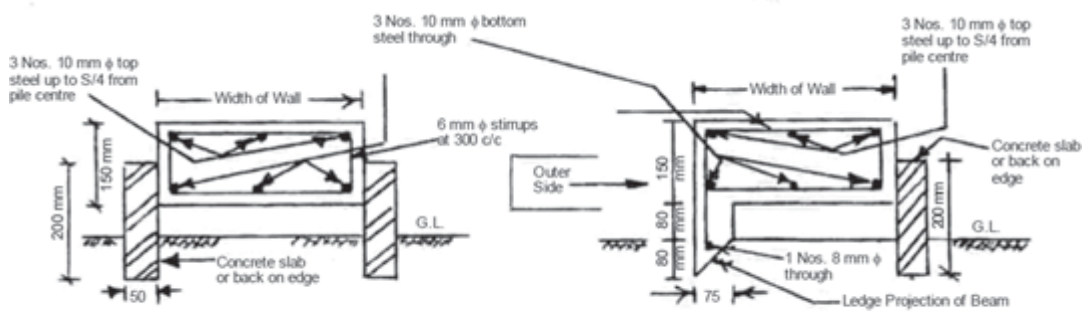

SECTION OF INTERIOR BEAM IN EXPANSIVE SOILS

SECTION OF EXTERIOR BEAM IN EXPANSIVE SOILS

EARTH WORK :

Item No. 5 :

Earth work in surface excavation not exceeding 30 cm in depth but exceeding 1.5 m in width as well as 10 sqm on plan including getting out and disposal of excavated earth with all lead and lift, as directed by Engineer-in- Charge: All kinds of soil

General:
Excavation for foundation in all kind of soil including sorting out and stacking of useful materials and disposing of the excavated stuff for all lead, including dewatering and excavating debris excluding backfilling the trenches/ foundation etc. complete, as directed. No extra payment will be made for shoring, strutting, **stabilizing** and dewatering. Depth up to 1.5 meter. The depth of the foundation shall be as per the item description.

Measurements

The length and breadth shall be measured with a steel tape correct to the nearest cm. and the area worked out to the nearest two places of decimal in square metres.

Mode of Measurement & Payment:
Rate shall be paid for a unit of one Sq.m.

Item No. 6 :

Excavation work for all kind of soils for depth from 0.0 M to 1.50 M. including sorting out and stacking of useful materials and Carting away and Disposing off the Excavated Stuff (Unsuitable or Surplus), serviceable material, unserviceable material / debris by demolition and breaking RCC members, masonary structure, pipelines, debris etc. For all lift and lead outside premises. Any kind of measures require for soil stabilization during excavation will be solely responsibility of contractor including design and execution. Contractor to quote excavation item rates considering above measures and No extra payment will be made for Royalty fees for excavated and carting away earth. Surplus earth disposed at non objectionable place to be found by the Contractor.
General:

Excavation for foundation in all kind of soil including sorting out and stacking of useful materials and disposing of the excavated stuff for all lead, including dewatering and excavating debris excluding backfilling the trenches/ foundation etc. complete, as directed. No extra payment will be made for shoring, strutting, **stabilizing** and dewatering. Depth up to 1.5 meter. The depth of the foundation shall be as per the item description.

Mode of Measurement & Payment:
Rate shall be paid for a unit of one cu.m.

Item No. 7 :

Excavation work all kind of soils for depth from 1.5 M to 3.0 M. including sorting out and stacking of useful materials and Carting away and Disposing off the Excavated Stuff (Unsuitable or Surplus), serviceable material, unserviceable material / debris by demolition and breaking RCC members, masonary structure, pipelines, debris etc. For all lift and lead outside premises. Any kind of measures require for soil stabilization during excavation will be solely responsibility of contractor including design and execution. Contractor to quote excavation item rates considering above measures and No extra payment will be made for Royalty fees for excavated and carting away earth. Surplus earth disposed at non objectionable place to be found by the Contractor.

General:
Excavation for foundation in all kind of soil including sorting out and stacking of useful materials and disposing of the excavated stuff for all lead, including dewatering and excavating debris excluding backfilling the trenches/ foundation etc. complete, as directed. No extra payment will be made for shoring, strutting, **stabilizing** and dewatering. Depth up to 3.00 meter. The depth of the foundation shall be as per the item description.

Mode of Measurement & Payment:
Rate shall be paid for a unit of one cu.m.

Item No. 8 :

Over & Above the 3.0m to the required depth Excavation for foundation for all kind of soils for. including sorting out and stacking of useful materials and Carting away and Disposing off the Excavated Stuff (Unsuitable or Surplus), serviceable material, unserviceable material / debris by demolition and breaking RCC members, masonary structure, pipelines, debris etc. For all lift and lead outside premises. Any kind of measures require for soil stabilization during excavation will be solely responsibility of contractor including design and execution. Contractor to quote excavation item rates considering above measures and No extra payment will be made for Royalty fees for excavated and carting away earth. Selected Surplus earth disposed at non objectionable place to be found by the Contractor.

General:
Excavation for foundation in all kind of soil including sorting out and stacking of useful materials and disposing of the excavated stuff for all lead, including dewatering and excavating debris excluding backfilling the trenches/ foundation etc. complete, as directed. No extra payment will be made for shoring, strutting, **stabilizing** and dewatering. Depth beyond 3.00 meter. The depth of the foundation

shall be as per the item description.

Mode of Measurement & Payment:
Rate shall be paid for a unit of one cu.m.

Item No. 9 :

Supplying and filling of good yellow soil / earth (bought from outside including royalty) by mechanical transport upto all lead and lift also including rolling with 8-10 Tone vibro roller to achive MDD of soil as 95% including watering of the earth in layers not exceeding 20 cm in single layer.

Workmanship:

Filling with available selected/ approved and brought from out side / stacked excavated earth (excluding rock and black cotton soil) in foundation, trenches, plinth & plot etc., in layers not exceeding 20 cm. in depth, including breaking the clods, watering to optimum moisture content, ramming and compacting by mechanical means of suitable type of vibrator, including freight, transportation, loading, unloading, screening, passes etc. all complete as instruction & directions of the Engineer-in-charge (Consolidated measurements of fill shall be paid for under this item). The rates shall include for all leads and lifts including transporting using mechanical / manual means within the campus area. Note: Using excess available excavated earth from foundations and dressing of the plot area. The earth to be used for filling shall be free from salts, organic or other foreign matter. All clods of earth shall be broken to a size not bigger than 50 mm. As soon as the work in foundation has been completed and measured, the sides of foundation shall be cleared of all debris, brick bats, mortar dropping etc. and filled with earth in layers not exceeding 15 cm. Each layer shall be adequately watered, rammed well and consolidated before the succeeding layer is laid. The earth shall be rammed with mechanical rammer of different capacity as per site condition. The plinth shall be similarly filled with earth in layers not exceeding 15 cm, adequately watered and consolidated by ramming with iron rammers/ mechanical rollers. When filling reaches finished level, the surface shall be flooded with water for at least 24 hours and allowed to dry and then rammed and consolidated. The finished level of filling shall be kept to shape and gradient, intended to receive any floor finish. In case of large heavy duty flooring like factory flooring, the consolidation may be done by power rollers, where so specified or as directed. The extent of consolidation required shall also be as specified or as directed. The excavated stuff of the selected type only shall be allowed to be used for filling the trenches and plinths. Under no circumstances, black cotton soil shall be used for filling the plinths. The soil used for backfilling shall have optimum moisture content (OMC). The compaction shall be carried out to achieve Proctor density of 95%. The procedure for OMC and proctor density shall be carried out as per relevant IS codes. The samples for test shall be as per the relevant IS codes.

Mode of Measurements and Payment:
The payment shall be made for filling in plinth and sides of foundations. No deductions shall be made for shrinkage or voids, if considered as instructed above. The rate includes the cost of mechanical compaction by compactors. The rate shall be for a unit of one m^3. Only consolidated measurements of the fill shall be measured and paid for under this item. Foundation filling shall be measured and paid only if the excavation item is without backfilling.

Item No. 10 :

Construction of granular sub-base by providing close graded Material conforming to specifications, mixing in a mechanical mix plant at OMC, carriage of mixed material by tippers to work site, for all leads & lifts, spreading in uniform layers of specified thickness with motor grader on prepared surface and compacting with vibratory power roller to achieve the desired density, complete as per specifications and directions of Engineer-in-Charge. With material conforming to Grade - II (Size rang 53 mm to 0.075 mm) having CBR Value - 25.

Specification as per CPWD : 16.62 Below :

16.62. GRANULAR SUB–BASE

16.62.1. Scope

This work shall consist of laying and compacting well-graded material on prepared subgrade in accordance with the requirements of these Specifications. The material shall be laid in one or more layers as sub-base or lower sub-base and upper sub-base (termed as sub-base hereinafter) as necessary according to lines, grades and cross-sections shown on the drawings or as directed by the Engineer-in-charge.

16.62.2. Materials

16.62.2.1. The material to be used for the work shall be natural sand, crushed gravel, crushed stone, crushed slag or combination thereof depending upon the grading required. Use of materials like brick metal, Kankar and crushed concrete shall be permitted in the lower sub-base. The material shall be free from organic or other deleterious constituents and shall conform to the grading given in Table 16.44 and physical requirement given in Table 16.45 Gradings III and IV shall preferably be used in lower sub-base. Grading V and VI shall be used as a sub-base-cum-drainage layer. The grading to be adopted for a project shall be as specified in the Contract. Where the sub-base is laid in two layers as upper sub-base and lower sub-base, the thickness of each layer shall not be less than 150 mm.

16.62.2.2 If the water absorption of the aggregate determined as per IS : 2386 (Part 3); if this value is greater than 2 per cent, the aggregate shall be tested for Wet Aggregate Impact Value (AIV) (IS: 5640). Soft aggregates like Kankar, Brick ballast and laterite shall also be tested for Wet AIV (IS: 5640).

TABLE No. 16.44

GRADING FOR GRANULAR SUB-BASE MATERIALS

IS Sieve Designation	Percent by Weight Passing the IS Sieve					
	Grading I	Grading II	Grading III	Grading IV	Grading V	Grading VI
75.0 mm	100	--	--	--	100	--
53.0 mm	80-100	100	100	100	80-100	100
26.5 mm	55-90	70-100	55-75	50-80	55-90	75-100
9.50 mm	35-65	50-80	--	--	35-65	55-75
4.75 mm	25-55	40-65	10-30	15-35	25-50	30-55
2.36 mm	20-40	30-50	--	--	10-20	10-25
0.85 mm	--	--	--	--	2-10	--
0.425 mm	10-15	10-15	--	--	0-5	0-8
0.075 mm	<5	<5	<5	<5	--	0-3

TABLE No. 16.45

PHYSICAL REQUIREMENTS FOR MATERIALS FOR GRANULAR SUB-BASE

Aggregate Impact Value (AIV)	IS:2386 (Part 4) or IS:5640	40 Maximum
Liquid Limit	IS:2720 (Part 5)	Maximum 25
Plasticity Index	IS:2720 (Part 5)	Maximum 6
CBR at 98% dry density (at IS:2720-Part 8)	IS:2720 (Part 5)	Minimum 30 unless otherwise specified in the Contract

16.62.3 Construction Operations

16.62.3.1. Preparation of Sub-Grade:

The surface of the sub grade to receive the Granular Sub-base shall be prepared to the specified lines and crossfall (Camber) as necessary and made free of dust and other extraneous materials. Any ruts or soft yielding places shall be corrected in an approved manner and rolled with 80 – 100 kN smooth wheeled roller until firm surface is obtained if necessary by sprinkling water. Weak places shall be strengthened, corrugations removed and depressions and pot holes made good with suitable materials, before spreading the aggregate for GSB.

Where the existing surface over which the sub base of GSB is to be laid is black topped, to ensure effective internal drainage, furrows 50 mm x 50 mm (depth of furrows increased to reach bottom of bituminous layer where necessary) at one metre intervals shall be cut in the existing bituminous surface at 45 degrees to the central line of the carriageway at one metre intervals in the existing road before the GSB is laid.

16.62.3.2 Spreading and compacting:

The sub-base material of grading specified in the Contract and water shall be mixed mechanically by a suitable mixer equipped with provision for controlled addition of water and mechanical mixing. So as to ensure homogenous and uniform mix. The required water content shall be determined in accordance with IS:2720 (Part 8). The mix shall be spread on the prepared sub-grade with the help of a motor grader of adequate capacity, its blade having hydraulic controls suitable for initial adjustment and for maintaining the required slope and grade during the operation, or other means as approved by the Engineer-in-charge.

Moisture content of the mix shall be checked in accordance with IS:2720 (Part 2) and suitably adjusted so that, at the time of compaction, it is from 1 to 2 per cent below the optimum moisture content (OMC).

Immediately after spreading the mix, rolling shall be done by an approved roller. If the thickness of the compacted layer does not exceed 100 mm, a smooth wheeled roller of 80 to 100 kN weight may be used. For a compacted single layer upto 200 mm the compaction shall be done with the help of a vibratory roller of minimum 80 to 100 kN static weight capable of achieving the required compaction. Rolling shall commence at the lower edge and proceed towards the upper edge longitudinally for portions having unidirectional crossfall or on super elevation. For carriageway having crossfall on both sides, rolling shall commence at the edges and progress towards the crown.

Each pass of the roller shall uniformly overlap not less than one third of the track made in the preceding pass. During rolling, the grade and crossfall (camber) shall be checked and any high spots or depressions,

which become apparent, corrected by removing or adding fresh material. The speed of the roller shall not exceed 5 km per hour.

Rolling shall be continued till the density achieved is at least 98 percent of the maximum dry density for the material determined as per IS : 2720 (Part 8). The surface of any layer of material on completion of compaction shall be well closed, free from movement under compaction equipment and from compaction planes, ridges, cracks or loose material. All loose, segregated or otherwise defective areas shall be made good to the full thickness of layer and re-compacted.

16.62.4 Measurements

Granular sub-base shall be measured as finished work in position in cubic metres. The length and breadth shall be measured to the nearest centimetre. The depth of consolidated layer shall be computed to nearest half centimetre by taking average of depths at the centre and at 30 cm from the left and right edges at a cross section taken at 100 metre interval or less as decided by the Engineer-in-Charge by making small pits. The consolidated cubical contents shall be calculated in cubic metres correct to two places of decimal. The protection of edges of granular sub-base extended over the full formation as shown in the drawing shall be considered incidental to the work of providing granular sub-base and as such no extra payment shall be made for the same.

16.62.5. Rate

The Contract unit rate for granular sub-base shall be payment in full for carrying out the required operations including all labour, tools, equipments, machinery and incidentals to complete the work to the specifications as described above.

CONCRETE WORK :

General Note for Concrete work:

1. All Concrete Work content as per grade (as per item description) and as per latest IS 456 for all PCC & RCC elements of all shape, all size, at all places and heights/ depths including transporting, laying of concrete to site by any means like pumping or tower crane etc., finishing and curing etc. and including Admixtures in recommended proportions as per IS 9103 to accelerate, retard setting of concrete as per direction of Engineer-in-charge. Rate shall be inclusive of providing grooves, drip moulds, ghisis, pockets, cutouts etc. and labour for insert sleeves if any wherever required while casting. Rate also to include lift charges and scaffolding for any heights / depths from FFL/GL. (unless otherwise specified)

2.**All formwork should be rigid & water tight using best quality of ordinary shuttering ply / steel plates with supporting system of MS adjustable steel props / spans / frames for any shapes, sizes, planes including strutting, propping, bracing, staging etc**., complete to give smooth & fair finish & including false staging work where height exceeds more than 4.5 mtrs. Item of Form Work and Reinforcement shall be separately measured and paid for it. P.V.C spacers / Concrete spacers of appropriate size and design for the cover of reinforcement shall be used. Concrete work for all civil, plumbing, electrical & infrastructure works.

Item No. 11 :

Providing and laying in position cement concrete of specified grade including the cost of centering

and shuttering - All work up to plinth level : 1:3:6 (1 Cement : 3 Coarse sand (Zone – III) : 6 graded stone aggregate (20 mm nominal size).

As per general technical specification

Mode of Measurements and Payment:
Rate shall be paid for a unit of one cu.m.

REINFORCEMENT CEMENT CONCRETE :

General:
Cement concrete delivered at site should be workable and should satisfy all the required standard tests like cube test and slump test etc., as specified in code of practice. Samples taken at site only will be deciding factor. Department will not have any direct contact in matters relating to payment, delivery schedule, quality of concrete etc. It is the responsibility of contractor ensures proper co-ordination for the timely supply of concrete and approved quality product. Contractor has to make arrangement for proper approach road (for which nothing extra shall be paid for) to enable the vehicle carrying concrete to move freely without any extra cost to the department before ordering the concrete. However existing approach road may be made use of for this purpose. Contractor has to ensure proper strong shuttering / centering to receive the concrete at all heights. Contractor has to indemnify the department arising out of possible dispute with the manufacturers. The design mix of RMC for the manufacturer / supplier of RMC has to be obtained well in time and approval of Engineer in Charge to be obtained prior to use. The design mix should be based on latest IS 456 and required admixtures in recommended proportions as per IS : 9103. This approval has to be obtained whenever the design mix is changed. The RMC should be supplied confirming to the approved design mix which shall be continuously checked during the progress of work. All the quality checks as per IS stipulations should be scrupulously followed during the concreting. The work shall be carried out at all heights as shown in Bill of Quantities. The relevant specifications of item no15 & 16 shall be followed except that the concrete mix shall be designed from preliminary tests the proportioning of cement and aggregates shall be done by weight and necessary precautions shall be taken in the production to ensure that the required work cube strength is attained and maintained. The letter "M" refers to mix and numbers specify 28 days works cube compressive strength of 150 mm. cubes of the mix expressed in N/mm2.Before carrying out the design mix contractor shall confirm the exposure condition for the design of concrete. Mix design shall be carried out for environmental exposure condition as given in IS 456:2000 page 18 table 3.All concrete work shall have fair finish concrete surface unless otherwise specified.

Materials:
Water shall confirm to M-1, Cement to M-3, sand to M-6. Graded stone aggregate 20mm nominal size to M-13. Measurement and storage of materials: measurement and storage of materials shall be done in accordance with the requirements of IS: 456:2000.The concrete shall be designed as per relevant latest IS code- IS 10262 and SP 23, with or without chemical admixture to provide the grade of concrete having required workability and characteristic strength as per IS 456:2000. The proportion of cement, sand and coarse aggregates shall be determined by weight. The weight batch machine shall be used for maintaining proper control over the proportion of aggregates as per mix design. The design mix shall be got approved by Engineer in-charge before starting the concrete work. The minimum cement content shall depend on the exposure condition of the concrete. The minimum cement content given in table (IS 456:2000, table 5) shall be adopted irrespective of whether the

contractor achieves the desired strength with less quantity of cement. The strength requirements of different grades of concrete shall be as under:

Grade of Concrete	Compressive strength of 15 cm. cubes in N/mm2. Concrete at 7 and 28 days conducted in accordance with IS : 516-1959.		
	At 7 Days	At 28 Days	Max size of agg. In mm
M -20	13.5	20	20
M-25	17	25	20
M -30	21	30	20
M-35	24	35	20

In all cases, the 28 days compressive strength specified in above table be the criteria for acceptance or rejection of the concrete. Where the strength of a concrete mix as indicated by tests, lies in between the strength of any two grades specified in the above table, such concrete shall be classified in for all purposes as concrete belonging to the lower of the two grades between which its strength lies. The Contractor shall take necessary care to avoid sand streaks, air holes, honey combining etc., on finished concrete surface.

Basis of Supply:
Depending upon the agreement the ready mix concrete shall be supplied on iehter of the following basis:a) Specified strength based on 28-day compressive strength of 15cm cubes tested in accordance with IS: 456-2000.b) Specified mix proportion.
When the concrete is manufactured and supplied on the basis of specified strength, the responsibility for the design of mix shall be that of the contractor and the concrete shall confirm to the requirements specified. **Mixing, consistency, inspection, transportation and laying, formwork for concrete**:
General Requirements:
The minimum cement content for the various mixes shall be as per Mix Design whichever is higher and the details regarding proportioning and works control shall be in accordance with IS: 456:2000 or our specification stated. When a transit mixer is used for transportation of concrete, no extra water should be added to the concrete from elsewhere after initial introduction of mixing water from the batch, except when on arrival at the site of the work, the slump of the concrete is less than that specified: such additional water to bring the slump within required limits shall be injected into that specified: such additional water to bring the mixer under such pressure and direction of flow that requirements for uniformity are met. When a transit mixer is used for transporting concrete, the concrete shall be delivered to the site of the work and discharge shall be complete within one and half hour (when the prevailing atmospheric temperature is at or below 20 degree Celsius) of adding the mixing water to the dry mix of cement and aggregate or of adding the cement to the aggregate whichever is earlier. The compressive strength and slump test shall be performed by third party or outside laboratory is required. It is most important to keep the specified water cement ratio constant and at its correct value. To this end, moisture content in both fine and coarse aggregates shall be determined by the Engineer-in-charge, according to the weather conditions. The amount of mixing water shall then be adjusted to compensate for variations in the moisture content. For the determination of moisture content in the aggregates, IS: 2386 (Part III) shall be referred to. Suitable adjustments shall also be made in the weights of aggregates due to variation in their moisture content.

The bars shall be kept in position by the following methods:
In case of beam, slab, wall and column, sufficient number of PVC block or precast cover block in cement mortar 1:2 (1 cement: 2 coarse sand) about 4 cm. x 4 cm. round or square section and of

thickness equal to as specified in the drawing shall be placed between the bar and shuttering to maintain the requisite cover in the concrete member. In case of cantilevered or doubly reinforced beams/slabs, the top main reinforcing bars shall be held in position by introducing chair of appropriate bar spacers or supports bar at 1.0 to 1.2 m. centers. In case of columns and walls, the vertical bars shall be kept at the top of the mould in position by means of timber/steel templates with slots accurately cutout in them. The templates shall be removed after concreting has been done below it. The bars may also be suitably tied by means of annealed GI wires to the shuttering to maintain their position during concreting. The GI wire shall be tied in such a way that they shall not get embedded in the concrete. The bars shall be tied with GI binding wires as per the instructions given by Engineer-in-charge.

Temperature:
The temperature of the concrete at the place and time of delivery shall not less than 5-degree Celsius above the prevailing shade temperature is less than 2.5 degree Celsius and the thermometer reading is falling.

Concrete Manufactured and Supplied On The Basis Of Specified Strength:
The contractor shall supply the following information for guidance of the manufacturer:
The type of cement to be used MSA Type of admixture to be used, if specified Min. acceptable strength Slump of concrete or compacting factor Ages at which the test cubes or beams are to be tested, and the frequency and number of test to be made any other requirement

Tolerances:
Unless otherwise agreed to between the architect and the contractor, the concrete shall be deemed to comply with the requirements of this standard, if the results of tests where applicable lie within the tolerance specified below:

Consistency of workability:
The slump average of two tests) shall not differ from the specified value by + 10mm for a specified slump. The compacting factor average of two tests shall be within + 0.03 of the value specified. If any other method of determining consistency to be used, a suitable tolerance shall be agreed to between the purchaser and the manufacturer. The test for consistency or workability shall be completed within 15 minutes of the time of receipt of the ready mix concrete at the site. Aggregate- When tested in accordance with IS 2386 (part-I)-1963, the quantity of aggregate larger than the max. size specified by the purchaser shall not exceed 5% of the qty. of course aggregate and all such excess shall pass through sieve of next higher size. **Sampling and Testing** to be followed as per specification mentioned in Item no. 11 sub clause 11.9

Records and Certificates:
The contractor shall keep from the manufacturer batch records of the quantities by mass of all the solid materials, of the total amount of water used in mixing and of the results of all tests. If required by the Engineer-in-charge, the contractor shall furnish certificates, at agreed intervals, giving this information.

Item No. : 12 :

Providing and laying in position Ready Mixed Concrete M-250 Grade controlled concrete reinforced cement concrete work For Foundation Footings / Beams / Columns / Lintel / Coping etc using

cement content as per approved design mix manufactured in fully automatic batching plant and transported to site of work in transit mixer having continuous agitated mixer manufactured as per mix design of specified grade for reinforced cement concrete work and as approved by the Engineer in-charge including pumping of RMC from transit mixer to site of laying, excl. the cost of reinforcement but including the cost of centering, shuttering, using regular shuttering plates, plywood, Steel Adjustable Props, Cup lock system, planks, props, spans, runners approved by Structural designer, vibrating, fair finishing and cost of admixtures in recommended proportion as per IS 9103 to accelerate / retard setting of concrete, improve workability without impairing strength and durability as per direction of Engineer In charge. (Min Cement & Fly Ash Content as per IS: 456 shall be maintained).

Relevant Specification of should be followed as above. This concreting should be done in Footing, Foundation (Raft), pile cap, Ground Beam etc. all kind of RCC structures work levels and shapes. No extra payment will be made towards **Shoring, strutting, Dewatering if require** for the all kind of RCC structures work and except the Concrete Grade & Level. Concrete Grade should be **M-250** for the all kind of RCC structures work for Plinth level at various levels as per BOQ Provision. The minimum cement content for the various mixes shall be **380 Kg/cum** or as per Mix Design whichever is higher and the details regarding proportioning and works control shall be in accordance with IS: 456:2000 The proportion given for a particular grade shall not, however, be placed in higher grade on the ground that the test strength are higher than minimum specified.

The relevant specification shall be followed except that the work to be carried out in superstructure instead of Foundation and plinth. The rate shall include the cost of scaffolding apart from the. Work above Plinth level at various levels as per BOQ Provision.

Mode of Measurements and Payment:
The consolidated cubical contents of concrete work as specified in item shall be measured. The volume occupied by reinforcement shall not be deducted from RCC work. The rate shall be for a unit of one m3.The rate includes placing the concrete at heights as given in Bill of Quantities,. The rate does not include the cost of reinforcement but incl. cost of form work. No extra payment will be made towards **Shoring, strutting, Dewatering if require**

Item No. 13 :

Providing TMT Bar FE 500D reinforcement for RCC work including bending,Cutting,binding with G.I Binding wire and placing in position complete at differenct ht. and various level as shown in the drawing From Foundation to all Level and above with all lead and lift.

Material:

Steel for Reinforcement:

Steel reinforcement for concrete shall be round/ribbed bars shall be CRS – TMT FE 500, unless otherwise specified and equivalent conforming to IS: 1786 for mechanical properties with improved corrosion resistance and bond strength shall be used. Only new steel shall be delivered to the site and shall be free of mill scale, loose rust, grease oil, paint or any other deleterious materials which reduce or destroys bond.

Nominal mass/weight:

The tolerance on mass/ weight for round and square bars shall be the percentage given in IS code of the mass/ weight calculated on the basis that the masses of the bar/wire of nominal diameter and of density 7.85 kg/ cm3 or 0.00785 kg/mm3

Physical Properties:

High strength deformed bars & wires shall conform to IS 1786. The physical properties for all sizes of steel bars are mentioned below for FE -500

Sr. No	Property	Fe500
1	0.2 Per cent Proof stress/ yield stress, Min, N/mm2	500.0
2	Elongation, per cent, Min. on gauge length 5.65 A, where A is the cross-sectional area of the test piece.	16.0
3	Tensile strength, Min	10 Per cent more than the actual 0.2 per cent proof stress/ yield stress but not less than 565.0 N/mm2
4	Total elongation at maximum force, percent, Min on gauge length 5.65 A , where A is the cross-sectional area of the test piece.	5
5	Bend- Re bend Test	This shall be done as per IS 1786

Chemical composition of reinforcement bars shall be as per Table follows:-

Sr. No	Particular	Result
1	Carbon	-0.15% max
2	Sulphur (S)	-0.05% max
3	Phosphorus (P)	-0.12% max
4	S+P	-0.17 % max
5	Silicon	-0.45 % max
6	Corrosion Resistant elements	-1.5 % max

Thermo Mechanically treated reinforcement bars:

(a) There is no BIS code for TMT bars. The available code BIS 1786 pertains to HSD Bars. Therefore there should be no stipulation that TMT bars should conform to relevant BIS code.
(b) The TMT bars are being produced under valid license from either of the firms namely Tempcore, Thermex Evcon Turbo & Turbo Quench. These firms have acquired patents and are giving licenses to various producers to produce TMT Bars.
(c) The TMT bars shall conform to IS 1786 pertaining to Fe 415 D or Fe 500 D or Fe grade of steel as specified.

Binding Wire

Binding Wire shall conform to M-21. The reinforcement shall be securely bound wherever bars intersect or wherever required with 18 gauge (1.22 mm) annealed steel wire conforming to IS: 280.

Welding electrodes:
Electrodes used for welding of steel bars shall be ordinary mild steel grade 2 electrodes conforming to IS: 814 and shall be the best quality and approved by the Engineer.-In-Charge. The work shall be carried out strictly as per IS: 2751 and IS: 9417.
Welding of reinforcement bars covered in this specification shall be done in accordance with the requirements of IS 2751

Sampling & Testing

Sampling:
Sampling shall be done in accordance with relevant IS codes. For every40 MT (Metric Ton) of steel at least one test shall be done. CRS reinforcing bars shall conform to the physical properties of IS: 1786. In addition when tested for corrosion resistance as per the standard ASTM method such as salt spray test (B.117.90), Potential Dynamic Polarization measurement test (G.5.78), Atmospheric Corrosion test (G.50.76) and Sulphur-di-oxide chamber test (G.87.84) shall exhibit corrosion resistance index of minimum 1.5.CRS (deformed) bars should either be butt or lap welded as per recommended practice of IS:9417. For best results basic coated electrodes containing copper and/or nickel shall be used.

Testing:
Test certificates from manufacturer, mill certificates and certificates of origin shall be submitted for each consignment. Additional tests required shall be done as recommended by the client/consultant at the contractor's own cost. An accredited laboratory shall carry out testing.

Selection and preparation of Test sample:
All the tests pieces shall be selected by the Engineering-Charge or his authorized representative either-
(a) From cutting of bars
Or
(b) If he so desires, from any bar after it has been cut to the required or specified size and the test piece taken from and any part of it.
In neither case, the test pieces shall be detached from the bar or coil except in the presence of the Engineer-in-Charge or his authorized representative.

The test pieces obtained in accordance with as above shall be full sections of the bars as rolled and subsequently cold worked and shall be subjected to physical tests without any further modifications. No deduction in size by machining or otherwise shall be permissible. No test piece shall be enacted or otherwise subject to heat treatment. Any straightening which a test piece may require shall be done cold.

All tests as shown in IS code shall be carried out.

Causes of Rejection:

Any reinforcement so sampled and tested which fails to comply with the specifications shall be rejected by the client/consultant and the whole batch shall be removed from the site immediately. The contractor shall have no claim for bars mutilated in obtaining test samples.

Every bar shall be inspected before assembling on the work and defective, brittle or burnt bar shall be rejected. Cracked ends of bars shall be discarded. The contractor at his own expense shall immediately remove rejected steel from the work site.

Workmanship

Stacking and Storage

Steel for reinforcement shall be stored in such a way as to prevent distorting and corrosion. Care shall be taken to protect the reinforcement from exposure to saline atmosphere during storage, fabrication and use. It may be achieved by treating the surface of reinforcement with cement wash or by suitable methods. Bars of different classifications, sizes and lengths shall be stored separately to facilitate issue in such sizes and lengths to cause minimum wastage in cutting from standard length

Steel conforming to above for reinforcement shall be clear and free from loose mill scales, dust, loose rust, coats of paints, oil or other coating which may destroy or reduce bond. It shall be stored in such a way as to avoid distortion and to prevent deterioration and corrosion. Prior to assembly of reinforcement on no account any oily substance shall be used for removing the rust.

Bar bending schedule shall be made by the contractor before starting the work. The payment shall be done based on quantity worked out in bar bending schedule. The bar bending schedule shall be prepared as per SP 34.

Assembly of Reinforcement:

Bars shall be bent correctly and accurately to the size and shape as shown in the detailed drawing or as directed by Engineer-in-Charge. Preferably bars of full length shall be used. Necessary cutting and straightening is also included. Overlapping of bars, where necessary shall be done as directed by the Engineer-in-Charge. The overlapping bars shall not touch each other and these shall be kept apart with concrete between them by 25mm or 11/4 times the maximum size of the coarse aggregate whichever is greater. But where this is not possible, the overlapping bars shall be bound together at intervals not exceeding twice the dia. of such bars with two strands annealed steel wire of 0.90 mm to 1.6 mm twisted tight. The overlaps/ splices shall be staggered as per directions of the Engineer-in-Charge. But in no case the overlapping shall be provided in more than 50% of cross sectional area at one section.

Bonds and Hooks Forming End Anchorages:

Reinforcement shall be bent and fixed in accordance with procedure specified in IS 2502, code of practice of bending and fixing of bars for concrete reinforcement. The details of bends and hooks are shown below for guidance.

(a) *U-Type Hook*
In case of mild steel plain bars standard U type hook shall be provided by bending ends of rod into semicircular hooks having clear diameter equal to four times the diameter of the bar.

Note: In case of work in seismic zone, the size of hooks at the end of the rod shall be eight times the diameter of bar or as given in the structural drawings.

(b) *Bends*
Bend forming anchorage to a M.S. plain bar shall be bent with and internal radius equal to two times the diameter of the bar with a minimum length beyond the bend equal to four times the diameter of the bar.

Anchoring Bars in Tension
Deformed bars may be used without end anchorages provided, development length equipment is satisfied. Hooks should normally be provided for plain bars in tension. Development length of bars will be determined as per IS: 456.

Anchoring Bars in Compression
The anchorage length of straight bar in compression shall be equal to the 'Development length' of bars in compression as specified in IS: 456. The projected length of hooks, bend and straight lengths beyond bend, if provided for a bar in compression, shall be considered for development length.

Binders, stirrups, links etc. : In case of binders, stirrups, links etc. the straight portion beyond the curve at the end shall be not less than eight times and nominal size of bar.

Welding of Bars
Wherever facility for electric arc welding or gas pressure welding is available, welding of bars shall be done in lieu of overlap. The location and type of welding shall be got approved by the Engineer-in- Charge. Welding shall be as per IS 2751 and 9417.

When permitted or specified on the drawings, joints of reinforcement bars shall be welded with appropriate welding rod as per the instructions given by Structural Engineer. The type of welding, size of fillet etc. shall be as approved by Structural Engineer. Welded joints shall preferably be located at points when steel will not be subject to more than 75 % of the maximum permissible stresses and welds so staggered that any one section not more than 20 % of the rods are welded.
Suitable means shall be provided for holding bars securely in position during welding. It shall be ensured that no voids are left in welding and when welding is done in 2 or 3 stages

Mechanical splices:

Whenever indicated on the drawings or desired by the Architect and Engineer-in-charge, bars shall be joined by couplings which shall have a cross section sufficient to transmit the full stresses of bars. The ends of the bars that are joined by coupling shall be upset for sufficient length so that the effective cross sectional the base of threads is not less than normal cross section of the bar. Threads shall be standard threads. Steel coupling shall conform to IS: 226.

Mechanical connections for splicing reinforcement bars in congested locations shall be used only with the approval of consultant/Engineer.-In-Charge. Patented couplers as manufactured by Usha Martin Industries Ltd. (CCL bar grips) and BBR India Ltd. (BBR SWIF) shall be used wherever mentioned in the drawings or as per instruction of Structural Engineer. The couplers shall be attached to the reinforcement bars by forging, hydraulic pressing or screw couplers in special

circumstances may be permitted. All operations relating to reinforcement coupling shall be done using supplier's patented machine / equipment and in the presence of the supplier's representative. The contractor shall submit relevant trade literature, mil certificates, certificate of origin and letters of approval for each proposed application. A sample of each type of mechanical coupler shall be submitted for testing and approval prior to the use of any coupler in the works.

Placing in Position

Fabricated reinforcement bars shall be placed in position as shown in the drawings or as directed by the Engineer-in-charge. The bars crossing one another shall be tied together at every intersection with two strands of annealed steel wire 0.9 to 1.6 mm thickness twisted tight to make the skeleton of the steel work rigid so that the reinforcement does not get displaced during deposition of concrete.

Tack welding in crossing bars shall also be permitted in lieu of binding with steel wire if approved by Engineer-in-Charge.

The bars shall be kept in correct position by the following methods:

(a) In case of beam and slab construction pre-cast cover blocks in cement mortar 1:2 (1 cement : 2 coarse sand) about 4x4 cm section and of thickness equal to the specified cover shall be placed between the bars and shuttering, so as to secure and maintain the requisite cover of concrete over reinforcements.

(b) In case of cantilevered and doubly reinforced beams of slabs, the vertical distance between the horizontal bars shall be maintained by introducing chairs, spacers or support bars of steel at 1.0 meter or at shorter spacing to avoid sagging.

(c) In case of columns and walls, the vertical bars shall be kept in position by means of timber templates with slots accurately cut in them: or with clock of cement mortar 1:2 (1 cement: 2 coarse sand) of required size suitable tied to the reinforcement to ensure that they are in correct position during concreting.

(d) In case of other R.C.C. structure such as arches, domes, shells, storage tanks etc. a combination of cover blocks, spacers and templates shall be used as directed by Engineer-in-Charge.

Tolerance on Placing of Reinforcement*:*

Unless otherwise specified by the Engineer-in-Charge, reinforcement shall be placed within the following tolerances:

Tolerance in spacing

(a) For effective depth, 200 mm or less +10 mm

(b) For effective depth, more than 200 mm + 15 mm

Bending at Construction Joints:

Where reinforcement bars are bent aside at construction joints and afterwards bent back into their original position care should be taken to ensure that at no time the radius of the bend is less than 4 bar diameters for plain mild steel or 6 bar diameter for deformed bars. Care shall also be taken when bending back bars to ensure that the concrete around the bar is not damaged.

Cover:

The minimum nominal cover to meet durability requirements shall be as under:-

Exposure Condition as per IS 456-2000	*Nominal Concrete cover in mm not less than*

Mild	20
Moderate	30
Severe	45
Very severe	50
Extreme	75

Nominal cover to meet specified period of fire resistance shall not be less than as given in Table 16A of IS 456.

Chairs:
Adequate no. of chairs shall be provided to prevent sagging of reinforcement during concreting.

Mode of Measurements & Payment

For the purpose of calculating consumption, wastage shall not be permitted beyond 5 percent Excess consumption over 5% will be charged at penal rate.

Reinforcement **shall not be measured** in length including overlaps, separately for different diameters as actually used in the work. Where welding or coupling is resorted to in place lap joints, such joints shall not be measured for payment as equivalent length of overlap as per design requirement. From the length so measured, the weight of reinforcement shall be calculated in tones/Kg.

Reinforcement shall be measured in lengths of bar as actually placed in position on standard weight basis, no allowance being made in the weight for rolling margin. Wastage and binding wire shall not be measured. **Authorized overlaps, chairs, splices, spacers and hooks shall not be measured**. Rate quoted shall include the cost of welding if specified. Payment shall be made as per reinforcement drawings and
With theoretical weights only.

Cutting, bending, placing, binding and fixing in position as shown on the drawings and as directed it shall also include all devices for keeping reinforcement in approved position, cost of joining as per approved method and all wastage and spacer bars.

The rate shall be for a unit of One Kg for Foundation, Work above Plinth level at various levels as per BOQ Provision.

MASONRY WORK :

Item no. 14 :

Brickwork using common burnt clay building 2nd class bricks having crushing strength not less than 35 Kg./Sq.Cm. at differenct ht. and various level as shown in the drawing in cement Mortar 1:6 (1-Cement :6-finesand) (B) Conventional All work

Providing and laying Brick masonry works in foundation, Plinth & super structure using common burnt clay building bricks confirming to IS 1077-1986 having crushing strength not less than 35kg/Sq.cm in any shape cement mortar 1:6 (1 cement : 6 coarse sand) in any shape and all depth including curing, scaffolding racking / flush jointing etc. complete, as directed. For all civil, plumbing, electrical & infrastructure works.

1.0 Materials: Water shall conform to M-1. Cement to M-3. Sand to M-6. Brick to M-15. Cement mortar to M-11.

2.0 Workmanship:

2.1 Proportion: The proportion of the CM shall be as mentioned in the item description (cement: coarse sand), by volume.

2.2 Soaking of bricks: The bricks required for masonry shall be thoroughly wetted with clean water for about 24 hours before use or as directed. The cessation of bubbles, when the bricks are wetted with water is an indication of thorough wetting of bricks.

2.3 Laying:

2.3.1 Bricks shall be laid in English bond unless directed otherwise. Half or cut bricks shall not be used except when necessary to complete the bond; closer and in such case it shall be cut to required size and used near the ends of walls.

2.3.2 A layer of mortar shall be spread on full width for suitable length of the lower course. Each brick shall first be properly bedded and set home by gently tapping with the handle of the trowel or wooden mallet. Its inside face shall be flushed with mortar before the next brick is laid and pressed against it. On completion of the course, the vertical joints shall be fully filled from the top, with mortar.

2.3.3 The walls shall be taken up truly in plumb. All courses shall be laid truly horizontal and all vertical joints shall be truly vertical. Vertical joints in alternate courses shall generally be in one vertical plane. The thickness of brick course shall be kept uniform.

2.3.4 The bricks shall be laid with the frog facing upwards. A set of tools comprising of wooden straight edges, Manson's spirit level, square half meter rub (right angle), pins, string, level pipe and plumb shall be kept on the site of work for frequent checking during the progress of work.

2.3.5 Both the faces of walls, having thickness greater than 23 cm. shall be kept in proper plumb. All the connected brick work shall be kept not more than 1 m. over the rest of the work. Where this is not possible, the work shall be raked back according to bond (and not left toothed) at an angle not steeper than 45^0. In a day brick work shall not be laid more than 1m or 10 courses in height.

2.3.6 **All the fixtures, pipe outlets of water, etc. which are required to be built in the wall shall be embedded in CM, as per the drawings or as directed.** The frames of doors, windows, cupboards, etc. shall be housed into the brick work at the correct location and level, as directed. The heavy steel doors, windows frames, etc. shall be built in with brick work, but for ordinary steel doors and windows, required opening for frames, hold-fasts, etc. shall be left in the wall and frames shall be embedded later on in order to avoid damage to the frames.

2.3.7 Necessary scaffolding shall be provided by the Contractor. The supports of the scaffolding shall be sound and strong, tied together with horizontal pieces over which the

scaffolding planks shall be fixed. Normally simple scaffolding only shall be allowed. In this case horizontal pieces of the scaffolding shall rest in the holes, made in the header course only. The Contractor is responsible for providing and maintaining sufficiently strong scaffolding so as to withstand all loads likely to come upon it.

2.3.8 No through holes shall be left in brickwork to support the scaffolding. Only double scaffolding shall be erected. In case the holes are left in the brickwork, it shall be filled with 1:4:8 PCC.

2.3.9 Any grooves carried out for plumbing, electrical or for any other purpose shall be covered in related work scope and after completion of the same, the brick work shall be made to good.

2.4 Joints :

2.4.1 Bricks shall be so laid that all joints are quite flush with mortar. Thickness of joints shall not exceed 12 mm. The face joints shall be raked out as directed by raking tools daily, during the progress of work, when the mortar is still green so as to provide key for plaster or pointing to be done, subsequently.

2.4.2 The face of bricks shall be cleaned every day on which the brick work is laid and all mortar dropping shall be removed.

2.4.3 At the end of day's work or on holidays the top of unfinished masonry shall be kept wet. If the mortar becomes dry, white or powdery, for want of curing, work shall be pulled down and re-built at Contractor's expense.

2.5 **Curing:** Fresh work shall be protected from rain suitably. Masonry work shall be kept moist on all the faces for minimum period of 7 days. The top of masonry work shall be kept well wetted at the end of the day's work.

2.4.4 Preparation of foundation bed: If the foundation is to be laid directly on the excavated bed, the bed shall be levelled, cleared off of all loose materials, cleaned and wetted before starting masonry work. If masonry is to be laid on concrete footing, the top of concrete shall be roughened, cleaned and moistened. The Contractor shall obtain approval of the Engineer-in-charge for the foundation bed, before foundation masonry is started. When pucca flooring is to be provided flush with the top of the plinth, the inside of the plinth wall shall be lowered down having an offset of the same thickness of the flooring with respect to the outside plinth wall top or as directed.

2.6 Mode of Measurements and Payment :

2.6.1 The measurement of this item shall be taken for the brick masonry fully completed in foundation up to plinth for all levels, heights, shapes and locations as per the item description.. The limiting dimensions not exceeding those shown on the drawings or as directed shall be final. Battered, tapered and curved portions shall be measured net.

2.6.2 No deduction shall be made from the quantity of brick work, nor any extra payment shall be made for embedding in masonry or making holes in respect of following items :

2.7 End of joists beams, posts, girders, rafters, purlins, trusses, corbel, steps etc. where cross sectional area does not exceed 500 cm^2.

2.8 Architectural openings in walls, parapet and compound walls, not exceeding 1.0 m^2. Area.

2.9 Wall plates and bed plates, bearing of slabs, chhajjas and the like whose thickness does not exceed 10 cm. and the bearing does not extend to the full thickness of wall.

2.10 Drainage holes, recesses for cement concrete blocks to embed hold fasts for doors, windows etc., forming toothings, grooves etc. and providing cramps for holding stone lining.

2.11 Iron fixtures, pipes up to 300 mm. dia.; holdfasts and doors and windows built into masonry and sanitary and water supply pipes, etc., for concealed electrical wiring and any other fixtures or inserts.

2.12 Forming chases of section not exceeding 350 cm^2. in masonry.

3 Apertures for fire places shall not be deducted nor shall extra labour required to make splaying of jambs, throating and making arches over the aperture be paid for separately. The rate shall include for work of any shape e.g. pillars of any size and shape, curved or tapered walls, drip courses, projections, parapets, load bearing walls, sills, ottas, steps, tank walls, platforms and counter walls, ducts, channels and architectural mouldings like corbelling, pattas, etc.

4 The rate shall be for a unit of one m^3.

5 Testing and inspections for bricks or masonry shall be as per IS: 2212(1991). Lab testing report of bricks sample collected from brick supplied on site shall be obtained and submitted to client/ architect/ PMC. No extra cost shall be provide for the same.

Item no. 15 :

Half Brick Masonary in common burnt clay building works 2nd Class bricks having crushing strength not less than 35 kg / sq. cm. in Cement mortar 1:3 (1-Cement:3-coarse sand) at differenct ht. and various floors, levels and height as below and shown in the drawing with Providing Full length 75mm thick Band of Cement conrete (1 : 2 :4) at every Av. 90 cm layer. Concrete Band having 2 nos. of 10 mm dia TMT steel straight Bars, 8 mm dia TMT steel hooks at 15cm C/C Band embedded in Masonary.
(A) Conventional All Works

Materials:
Water shall confirm to M-1. Cement confirm to M-3. Sand confirm to M-6. Brick confirm to M-15. And Cement mortar confirm to M-11.

Workmanship:
Proportion:
The proportion of the Cement Mortar shall be as mentioned in the item description (cement: coarse sand), by volume.

Soaking of bricks:
The bricks required for masonry shall be thoroughly wetted with clean water for about 24 hours before use or as directed. The cessation of bubbles, when the bricks are wetted with water is an indication of thorough wetting of bricks.

Laying:
Bricks shall be laid in English bond unless directed otherwise. Half or cut bricks shall not be used except when necessary to complete the bond; closer and in such case it shall be cut to required size and used near the ends of walls. A layer of mortar shall be spread on full width for suitable length of the lower course. Each brick shall first be properly bedded and set home by gently tapping with the handle of the trowel or wooden mallet. Its inside face shall be flushed with mortar before the next brick is laid and pressed against it. On completion of the course, the vertical joints shall be fully filled from the top, with mortar. The walls shall be taken up truly in plumb. All courses shall be laid truly horizontal and all vertical joints shall be truly vertical. Vertical joints in alternate courses shall generally be in one vertical plane. The thickness of brick course shall be kept uniform. The bricks shall be laid with the frog facing upwards. A set of tools comprising of wooden straight edges, Manson's spirit level, square half meter rub (right angle), pins, string, level pipe and plumb shall be kept on the site of work for frequent checking during the progress of work. Both the faces of walls, having thickness greater than 115 mm. shall be kept in proper plumb. All the connected brick work shall be kept not more than 1 m. over the rest of the work. Where this is not possible, the work shall be raked back according to bond (and not left toothed) at an angle not steeper than 45^0. In a day brick work shall not be laid more than 1m or 10 courses in height. All the fixtures, pipe outlets of water, etc. which are required to be built in the wall shall be embedded in CM, as per the drawings or as directed. The frames of doors, windows, cupboards, etc. shall be housed into the brick work at the correct location and level, as directed. The heavy steel doors, windows frames, etc. shall be built in with brick work, but for ordinary steel doors and windows, required opening for frames, hold-fasts, etc. shall be left in the wall and frames shall be embedded later on in order to avoid damage to the frames. Necessary scaffolding shall be provided by the Contractor. The supports of the scaffolding shall be sound and strong, tied together with horizontal pieces over which the scaffolding planks shall be fixed. Normally simple scaffolding only shall be allowed. In this case horizontal pieces of the scaffolding shall rest in the holes, made in the header course only. The Contractor is responsible for providing and maintaining sufficiently strong scaffolding so as to withstand all loads likely to come upon it .No through holes shall be left in brickwork to support the scaffolding. Only double scaffolding shall be erected. In case the holes are left in the brickwork, it shall be filled with 1:3:6 PCC. Full length of masonry shall be covered with 75mm thick **Band** of Cement concrete (1: 2:4) at every Av. 90 cm layer. Concrete **Band** having 2 nos. of 10 mm dia TMT steel straight Bars, 8 mm dia TMT steel hooks at 15cm C/C Band embedded in Masonary.

Joints:
Bricks shall be so laid that all joints are quite flush with mortar. Thickness of joints shall not exceed 12 mm. The face joints shall be raked out as directed by raking tools daily, during the progress of work, when the mortar is still green so as to provide key for plaster or pointing to be done, subsequently. The face of bricks shall be cleaned every day on which the brick work is laid and all mortar dropping shall be removed. At the end of day's work or on holidays the top of unfinished masonry shall be kept wet. If the mortar becomes dry, white or powdery, for want of curing, work shall be pulled down and re-built at Contractor's expense.

Curing:
Fresh work shall be protected from rain suitably. Masonry work shall be kept moist on all thefaces

for minimum period of 7 days. The top of masonry work shall be kept well wetted at the end of the day's work.

Preparation of foundation bed:
If the foundation is to be laid directly on the excavated bed, the bed shall be levelled, cleared off of all loose materials, cleaned and wetted before starting masonry work. If masonry is to be laid on concrete footing, the top of concrete shall be roughened, cleaned and moistened. The Contractor shall obtain approval of the Engineer-in-charge for the foundation bed, before foundation masonry is started. When pucca flooring is to be provided flush with the top of the plinth, the inside of the plinth wall shall be lowered down having an offset of the same thickness of the flooring with respect to the outside plinth wall top or as directed.

Mode of Measurements and Payment:
The measurement of this item shall be taken for the brick masonry fully completed in **From basement to Eight floor including Terrace, Cabin, Machine room etc.**, heights, shapes and locations as per the item description.. The limiting dimensions not exceeding those shown on the drawings or as directed shall be final. Battered, tapered and curved portions shall be measured net. No deduction shall be made from the quantity of brick work, nor shall any extra payment be made for embedding in masonry or making holes in respect of following items: End of joists beams, posts, girders, rafters, purlins, trusses, corbel, steps etc. where cross sectional area does not exceed 500 cm^2. Architectural openings in walls, parapet and compound walls, not exceeding 1.0 m^2. Area. Wall plates and bed plates, bearing of slabs, chhajjas and the like whose thickness does not exceed 10 cm. and the bearing does not extend to the full thickness of wall. Drainage holes, recesses for cement concrete blocks to embed hold fasts for doors, windows etc., forming toothings, grooves etc. and providing cramps for holding stone lining. Iron fixtures, pipes up to 300 mm. dia.; holdfasts and doors and windows built into masonry and sanitary and water supply pipes, etc., for concealed electrical wiring and any other fixtures or inserts. Forming chases of section not exceeding 350 cm^2. in masonry. Apertures for fire places shall not be deducted nor shall extra labour required to make splaying of jambs, throating and making arches over the aperture be paid for separately. The rate shall include for work of any shape e.g. pillars of any size and shape, curved or tapered walls, drip courses, projections, parapets, load bearing walls, sills, ottas, steps, tank walls, platforms and counter walls, ducts, channels and architectural mouldings like corbelling, pattas, etc. Work above **basement to Eight floor including Terrace, Cabin, Machine room etc.** at various levels as per BOQ Provision. Concrete band carried out within this partition wall shall be measured under this item including concrete, reinforcement and shuttering. No extra payment shall be made for concrete band.

The rate shall be for a unit of sq.mt.

Testing and inspections for bricks or masonry shall be as per IS: 2212(1991). Lab testing report of bricks sample collected from brick supplied on site shall be obtained and submitted to client/ architect/ PMC. No extra cost shall be providing for the same.

STEEL WORK :

Item No. 16 :

Providing, supplying, fixing, fabricating, erecting, aligning the structural steel work for M.S. Grill madeup from round bar, hollow section, angle, plate, Round or Square Pipes, including all welded or bolted steel structures of various types with approved I.S.I. mark electrodes, bolts, anchor bolts

including cost of thread, Anchor plate cleats etc. in RCC or masonry work, including cutting, bending, welding, fixing, supplying as per shown on drawing and detailed specification or as per design incl. one coats of approved brand primer and two coats of oil paints, necessary scaffolding, tools tolerance etc. complete as directed by Engineer In Charge. (Payment will be made for weight of metal used in the work) (Work for all the floors)

Providing, supplying, fixing, **fabricating, erecting, aligning the structural steel** like pivot ,tubular 'T', 'I" section, angle, plate ,beam, channel section, Bar , hollow box or Z purlins, Round or Square Pipes, for built up purlins, roof trusses, columns, side runners, tie beams, sag rods, base plates gusset plates, cap plates, bearing bracing, gantry girders, rails, require support, pipes, including all welded or bolted steel structures of various types with approved I.S.I. mark electrodes, bolts, anchor bolts including cost of thread, Anchor plate cleats etc. in RCC or masonry work, including cutting, bending, welding ,fixing, supplying , Fabricating Decorative fevisted section or any structured member required to complete the job for Trusses, Canopy, doors, Frame, Railing, Entrance gate, pergola, Decorative hanging light , New window, parking shed or space frame or any

other required specified area as shown on drawing and detailed specification or as per design incl. three coats of approved brand primer and two coats of paints, necessary scaffolding, tools tolerance etc. complete as directed by Engineer In Charge. (Payment will be made for weight of metal used in the work) (Work for all the floors)

38.1 Materials: The structural steel shall conform to M-22.

38.2 Workmanship:

38.2.1 The MS Grill shall be prepared as per the drawings or as directed for fixing to wooden frames of windows etc.

38.2.2 The structural steel work & grill shall be fabricated to the designs and patterns shown in the drawings and the weight shall be as directed, and the joints shall be riveted or welded as shown in the plan or as directed. The structural steel work & grill so framed shall be fixed in to the frames of the windows etc. before they are erected in position. The outside strip frame of the structural steel work & grill shall be housed to its full thickness into the recess cut into the frame of the windows etc. The structural steel work & grill shall be fixed to the frame with number of bolts and nuts of screws viz. bolt nut/screw per 30 cm. of the length of outer strip subject to a minimum of 2 Nos. on each side of the frame or as indicated in the drawings or as directed. The welding work shall conform to I.S. 816-1969.

38.2.3 The bolts and nuts or screws shall be counter sunk and shall be fixed with the top of their heads flush with the face of frame strips.

38.3 Mode of measurement & payment:

No payment shall be made for weight of screws, bolts, nuts etc. Only weight of structural steel work & grill shall be paid.

The rate shall be for unit of one Kg including all material, labour, erection, hoisting, scaffolding protective measure, required for proper completion of the item of work. This shall also include conveyance and delivery handling, loading, unloading and storing etc. required for completing the item described above including necessary wastage involved.

Item No. 17 :

Providing, supplying, fixing, fabricating, erecting, aligning the structural steel like pivot ,tubular 'T', 'I" section, angle, plate ,beam, channel section, Bar , hollow box or Z purlins, Round or Square Pipes, for built up purlins, roof trusses, columns, side runners, tie beams, sag rods, base plates gusset plates, cap plates, bearing bracing, gantry girders, rails, require support, pipes, including all welded or bolted steel structures of various types with approved I.S.I. mark electrodes, bolts, anchor bolts including cost of thread, Anchor plate cleats etc. in RCC or masonry work, including cutting, bending, welding ,fixing, supplying , Fabricating Decorative fevisted section or any structured member required to complete the job for Trusses, Canopy, doors, Frame, Railing, Entrance gate, pergola, Decorative hanging light , for Electrical, water supply and HVAC structure New window, parking shed or space frame or any other required specified area as shown on drawing and detailed specification or as per design incl. three coats of approved brand primer and two coats of oil paints, necessary scaffolding, tools tolerance etc. complete as directed by Engineer In Charge. (Payment will be made for weight of metal used in the work) (Work for all the floors)

Specification same as per Item No.16 above:

38.4 Mode of measurement & payment:

No payment shall be made for weight of screws, bolts, nuts etc. Only weight of structural steel work & grill shall be paid.

The rate shall be for unit of one Kg including all material, labour, erection, hoisting, scaffolding protective measure, required for proper completion of the item of work. This shall also include conveyance and delivery handling, loading, unloading and storing etc. required for completing the item described above including necessary wastage involved.

FINISHES WORK:

Item No. 18 :

20mm thick Double coat Sand Faced / Mala cement plaster on Exterior walls at for various floors, levels and height as below and shown in the drawing consisting of 12mm thick backing coat of C.M. 1:5 (1-cement :5-sand) and 8mm thick finishing coat of C.M. 1:3 (1-cement :3-sand) etc. complete. as required to receive specified architectural finish like Vata, Grooves, pattern if any, drip mould etc. to correct line, level and plumb.

Materials:

1.1 Water shall conform to M-1. Cement mortar shall conform to M-11.

2 Sand shall conform to M-6 of attached Specification of Materials.
3 Cement mortar in proportion 1:3 (1-cement: 3 coarse sand) shall conform to M-11 of attached Specification of Materials.
4 Water shall conform to M-1 of attached Specification of Materials.

2 Workmanship:
2.1 The work shall be carried out in the coats. The backing coat (base coat) shall be 12 mm. thick in C.M. 1:3. The relevant specification of item shall be followed except that the thickness of back coat shall be 12 mm. average. Before the first coat hardens its surface shall be beaten up by edges of wooden tapers and close shall be made on the surface.
The subsequent coat shall be applied after this coat has been allowed to set for 3 to 5 days depending upon the weather conditions. The surface shall not be allowed to dry during this period.
2.2 The second coat shall be completed to 8 mm. thickness in C.M. 1:1 as described above, including raising sand facing by bushing. The sample of sand face shall be got approved before the work is started. The whole work shall be carried out uniformly as per sample approved.
2.3 Curing: The curing shall be started overnight after finishing of plaster. The plaster shall be kept wet for a period of 7 days. During this period it shall be protected from all damages.
3 Mode of measurements & payment:
3.1 The relevant specifications of item No. 11 shall be followed except that the sand face plaster on outside upto M. above ground level shall be measured under this item.
3.2 The rate shall be for a unit of one Sq.metre.

Item No. 19 :

Exterior texture: Providing and applying walls with exterior texture material of approved brand, patent, quality and manufactured approved by Architect including priming coat. Thoroughly brush the surface to remove all dirt and dust. The surface should be clean, dry and free from all contaminants and salt stains. Apply smart care crack seal to fill surface imperfections such as a holes, dents and cracks. Mix product with spatula with upwards movement for uniform colour and consistency. Dilute with 3-10% of water depending upon the texture required. Apply first coat of Allura Tornio/equivalent a medium grain texture creates an excellent antique effect with spatula for stainless steel trowel from top to bottom of wall to achieve uniform thickness about -0.5-1mm. Apply second coat of Apex Ultima Allura Torino of asian paint or equivalent using stainless steel trowel and relevant tool to create the desired pattern. Apply 2 or 3 coat of protective coat ultima to get desired shade. Alternatively, apply tinted asian paint tile guard clean (2 coats - maximum 30% dilution with water) to get 2 tone appearance.

Material

Acrylic based Exterior Texture in approved finish and quality laid of 2 mm. thick texture material in swirl / rainfall / vertical scratch / horizontal scratch finish of approved brand, quality and manufacturer.

Primer: The primer to be used for the painting with acrylic emulsion on cement concrete surfaces, Plastered surfaces, A.C. sheets, timber and metal surfaces, if necessary, shall be of approved base and as per Recommendations of the manufacturers.

76.2Workmanship:

(Two coats) laid on 2 to 2.5 mm. th. texture material pattern, quality and manufacturer by architect incl. priming coat (One coats) of white cement to give an even shade after thoroughly brushing the

surface to remove all dirt and dust and remains of loose powdered materials etc. compete & as per detail & directed by Architect& Engineer in-charge The materials required for work of texture work shall be obtained directly from approved manufactures or approved dealer and brought to the site in maker's drums; kegs. etc. with seal unbroken.

All materials not in actual use shall be kept properly protected, lids of containers shall be kept closed and surface of paint in open or partially open containers covered with a thin layer of turpentine to prevent formation of skin. The materials which have become state or flat due to improper and long storage shall not be used. The paint shall be stirred thoroughly in its container before pouring into small containers. While applying also, the paint shall be continuously stirred in smaller container. No left-over paint shall be put back into stock tins. When not in use the containers shall be kept properly closed. The surface shall be thoroughly cleaned and dusted. All rust, dirt and grease shall be thoroughly removed before textured work started. First coat of Exterior wall primer to be applied after thoroughly cleaning the plastered wall surface and it should be free from any loose paint, dust or grease etc. And growth of fungus, algae or moss should be removed by wire brushing and water. And should also fill cracks with Standard Crack Filler Paste. No texture work on exterior or other exposed part to the work shall be carried out in wet, damp or otherwise unfavorable weather and all the surfaces shall be thoroughly dry before textured work is started.

Scaffolding:

All scaffolding, hoisting arrangements and ladders, etc. required for facilitating of texture work shall be provided and removed on completion work by Contractor, at his own expense. The scaffolding, hoisting arrangement, ladders etc. shall be strong enough to withstand all live, dead and impact loads expected to act and shall be subject to the approval of the Architect and Engineer-in-charge. However, Contractor shall be solely responsible for the safety of the scaffolding, hoisting arrangement, ladders, work and workmen, etc. The scaffolding, hoisting arrangements and ladders shall allow easy approach to the work spot and afford easy inspection.

Application of Textured work:

First coat of Exterior wall primer to be applied after thoroughly cleaning the plastered wall surface and it should be free from any loose paint, dust or grease etc. And growth of fungus, algae or moss should be removed by wire brushing and water. And should also fill cracks with Standard Crack Filler Paste Brushing operations are to be adjusted to the spreading capacity advised by the manufacture of particular paint. The paint shall be applied evenly and smoothly by means of crossing and lying off. The crossing and laying off consists of covering the area over with paint, brushing the surface hard for the first time over and then brushing alternately in opposite directions two or three times and then finally brushing lightly in a direction at right angles to the same. In this process, no brush marks shall be left after the laying off is finished. The full process of crossing and lying off will constitute one coat. Each coat shall be allowed to dry completely and lightly rubbed with very fine grade of sand-paper and loose particles brushed off before next coat is applied. Each coat shall vary slightly in shade and shall be got approved from Engineer-in-charge before next coat is started.

Each coat the last shall be lightly rubbed down with sand paper of fine pumice stone and cleaned of dust before the next coat is applied. No hair marks from the brush of clogging of paint puddles in the corners of panels, angles of moldings etc. shall be left on the work.

Special care shall be taken while painting over bolts, nuts, rivets, overlaps etc. Approved best quality brushes shall be used.

The texture material about 15x15 cms. Shall be first applied horizontally and vertically at not more than 2 meters intervals over the entire surface to serve as gauge. The surfaces of these gauges shall be truly enplane of the finished plastered surface. The mortar shall then be applied in uniform surface slightly more than the specified thickness, then brought to a true surface by working a wooden straight edge reaching across the gauges with small upward and sideways movement at a time. Finally, the surface shall be finished off true with a trowel or wooden float according as a smooth or a sandy granular texture is required. Excessive toweling or overworking the float shall be avoided. All corners, arises, angles and junctions etc. shall be carried out with proper templates to the size required.

The Texture paint shall be applied with a brush with relatively short stiff hog or fiber bristles. The paint shall be brushed In uniform thickness and shall be free from excessively heavy brush mark The lamps shall be brushed out. Texture white cement paint shall not be applied on-surface already treated with white wash, color wash, distemper dry or oil bound varnishes, paint etc.

Curing:

Painted surfaces shall be sprinkled with water Iowa or three times a day, This shall be done between coats and for at least two days following the final coat. The curing shall be started as soon as the point-has hardened so as not be damaged by the sprinkling of water say about 12 hours after the application. Preparation of back-ground: The surface shall be cleaned of all mortar dropping, traces of algae, efflorescence and other foreign matter by water or by brushing. smooth surface shall be roughened by wire brushing .It is not hard and by racking if it is hard. In case of concrete surface, if chemical retarder has been applied to the form work.

Mode of Measurement& Payment:

Measurement should be as per IS 1200- latest and / or as per

The rate shall be for a unit of one sq. meter

Item No. 20 :

Providing and applying of two or three coats of premium water based, modified acrylic exterior emulsion with silicon additives confirming to IS 15489 standards with low VOC of 32.34 gms / lit, applied on textured/plaster surface work at all heights, all floors & all places including scaffolding. With one coat of premium exterior wall primer to give an even shade including thoroughly brushing the surface to free from mortar dropping and other foreign matter and sand paper smooth etc complete. (APEX)

33.1 Materials: Water shall conform to M-1 and acrylic paint shall conform to its supplier' specification Apex or equivalent as make approved by the Engineer In Charge.

33.1 Workmanship:

33.1.1 General
The materials required for work of painting work shall be obtained directly from approved manufacturers or approved dealer and brought to the site in maker's drums, cage etc. with seal unbroken.

All materials not in actual use shall be kept properly protected, lid of containers shall be kept closed and surface of paint in open or partially open containers covered with a thin layer of water to prevent formation of skin. The materials, which have become stale or flat due to improper and long storage shall not be used. The paint shall be stirred thoroughly in its container before pouring into small containers. While applying also, the paint shall be continuously stirred in smaller container. No left over paint shall be put back into stock tins when not in use. The paint shall be stirred thoroughly in its container before pouring into small containers.

If for any reasons, thinning is necessary, water shall be added as per supplier's instructions

The surface to be painted shall be thoroughly cleaned and dusted. All rust, dirt and grease shall be thoroughly removed before painting is started. No painting on exterior or other exposed parts of the work shall be carried out in wet, damp or otherwise unfavorable weather and all the surfaces shall be thoroughly dry before painting work is started.

33.1.2 Scaffolding:

Wherever scaffolding is necessary, it shall be erected in such a way that as far as possible no part of scaffolding shall rest against the surface to be white or colour washed. A properly secured, strong and well tied suspended platform (Zoola) may be used for white washing. Where ladders are used, pieces of old gunny bags shall be tied at top and bottom to prevent scratches to the floors and walls. For white washing of ceilings, proper stage scaffolding shall be erected where necessary. Also, while painting the ceiling, the floor area shall be covered properly with plastic so that the flooring is not spoiled.

33.1.3 Preparation of surface:

All unnecessary nails, hooks etc. shall be removed. Pitting in plaster shall be made good with plaster again and papered with a fine grade sand paper and made smooth. The surface affected by moulds, moss, fungi, algae lichens, efflorescence etc. shall be treated in accordance with IS : 2395 (Part-1)-1966.

33.1.4 Preparation of Mix: This shall be done as per the manufacturer's instructions. The thinning of emulsion is to be done with water and not with turpentine. The quantity of thinner to be added to shall be as per manufacturer's instructions.

33.1.5 Application:

Before pouring into small containers for use of applying, the paint shall be stirred thoroughly in its container. Also, the paint shall be continuously stirred in the smaller container, so that its consistency is kept uniform.

The paint shall be laid on evenly and smoothly by means of crossing and laying off. The crossing and laying off consists of covering the area over with paint, brushing the surface hard for the first time over and then brushing alternately in opposite directions two or three times and then finally brushing lightly in direction at right angles to the same. In this process, no brush marks shall be left after the laying off is finished. The full process of crossing and

laying off will constitute one coat. No hair marks from the brush or clogging of paint puddles in the corners of panels, angles of moldings etc. shall be left on the work.

On the newly plastered surface, the first coat shall be applied with 100% dilution and second and third coat shall be applied with 40 % dilution or as per the supplier's instructions The second or subsequent coat shall not be started until the preceding coat has become sufficiently hard to resist marking of the brush being used.

33.1.6 Precautions: (a) Old brushes if they are to be used with paints, shall be completely dried of turpentine or oil paint by washing in warm soap water. Brushes shall be quickly washed in water immediately after use and shall be kept immersed in water during break periods to prevent the paint from hardening on the brush. (b) In the preparation of walls for plastic emulsion painting, no oil base putties shall be used in filling cracks, holes etc. (c) Splashes on floors etc. shall be cleaned out without delay, as they will be difficult to remove after hardening. (d) Washing of surfaces treated with emulsion paint shall not be done within 3 to 4 weeks of application.

33.1.7 Protective measure: The surface of doors, windows, ventilators, floors, of furniture etc. and such other parts of the building not to be white/colour washed shall be protected from being splashed upon. Such surfaces shall be cleaned of white/colour wash splashed, if any, immediately after completing the painting, at no extra cost.

33.2 Mode of Measurements and Payment:

For mode of measurement latest version of IS 1200 shall be followed. All the work shall be measured in the decimal system as under:

(a) Dimensions shall be measured to the nearest 0.01 m.
(b) Area in individual items shall be worked out to the nearest 0.01 m2.

All works shall be measured in sq.mt. In jambs, soffits, sills etc. and for openings not exceeding 0.5 m2 each in area, for ends of joists, posts, beams, girders, steps etc. not exceeding 0.5 m2 each in area and for openings exceeding 0.5 m2 and not exceeding 3.0 m2 each in area, deductions and additions shall be made as under :-

1) No deductions shall be made for ends of joists, beams, posts, etc. and for openings not exceeding 0.5 m2 each. No addition shall be made for reveals, jambs, soffits, sills etc. of these openings nor for finish around ends of joists, beams, posts etc.

2) Deductions for openings exceeding 0.5 m2 but not exceeding 3.0 m2 each shall be made as follows and no addition shall be made for reveals, jambs, soffits etc. of these openings:

(a) When both the faces of walls are provided with the same finish, deduction shall be made for one face only.

(b) When each face of wall is provided with a different finish, deduction shall be made for that side of frame for door, windows, etc. on which width of reveals is less than that of the other side. Where width of reveals on both faces of wall are equal, deduction of 50% of area of opening on each face shall be made from total area of finish.

(c) When only one face of wall is treated and the other face is not treated, full deduction shall be made if when width of reveal on the treated side is less than that on the untreated side, but if the width of reveals is equal or more than on the untreated side neither deductions nor additions to be made for reveals, jambs, soffits, sills etc.

3) In case of area of openings exceeding 3.0 m2 each, deduction shall be made for openings but jambs, soffits shall be measured.

4) No deductions shall be made for attachment such as casing, conduits, pipe, electric wiring and the like. 3.2 Corrugated surfaces shall be measured flat as fixed and not girth. The quantities measured shall be increased by the following percentage and the resultant shall be included with the general areas:

(a) Corrugated steel sheets ---------- 14%
(b) Corrugated A.C. Sheets ---------- 20%
(c) Semi corrugated A.C. Sheets ---------- 10%
(d) Nainital pattern roof (Plain sheeting with rolls) ---- 10%
(e) Nainital pattern roof (with corrugated sheets) ----- 25%

Cornices and other wall features, when they are picked out in a different finish/colour shall be girthed and included in the general area.

The rate shall include the cost of all materials, labour, scaffolding, protective measures etc. required for the above specified operation, at all floors, at any height, in any position. Priming and Alkali resistant treatments, scrapping of surface washing etc. surface spoiled by smoke soot, removal of oil and grease spots, treatment for infection with efflorescence moulds, moss, fungi, algae and lichen and patch repairs to plaster wherever done shall not be paid extra. This shall also include conveyance, delivery, handling, unloading, storing work etc.

The rate shall be for a unit of one m^2.

ROAD WORK:

Item No. : 21

Providing and laying at or near ground level factory made kerb stone (H=350/450mm, W=300mm & 100mm thick of M-25 grade cement concrete in position to the required Excavation, PCC (1:3:6) having 75mm thickness in line, level and curvature, jointed with cement mortar 1:3 (1 cement: 3 coarse sand), including making joints with or without grooves (thickness of joints except at sharp curve shall not to more than 5mm), including making drainage opening wherever required complete etc. as per direction of Engineer-in-charge (length of finished kerb edging shall be measured for payment). (Precast C.C. kerb stone shall be approved by Engineer- in-charge).

Specification as per CPWD Items :

16.51 KERB STONE (PRECAST)

16.51.1 Laying

16.58.1.1 Trenches shall first be made along the edge of the wearing course of the road to receive the kerb stones of cement concrete of specified grade. The bed of the trenches shall be compacted manually with steel rammers to a firm and even surface and then the stones shall be set in cement mortar of specified proportion.

16.58.1.2 The kerb stones with top 20 cm. wide shall be laid with their length running parallel to the road edge, true in line and gradient at a distance of 30 cm. from the road edge to allow for the channel and shall project about 12.5 cm. above the latter. The channel stones with top 30 cm. wide shall be laid in position in chamber with finished road surface and with sufficient slope towards the road gully chamber. The joints of kerb and channel stones shall be staggered and shall be not more than 10 mm. Wherever specified all joints shall be filled with mortar 1:3 (1 cement : 3 coarse sand) and pointed with mortar 1:2 (1 cement: 2 fine sand) which shall be cured for 7 days.

16.58.1.3 The necessary drainage openings of specified sizes shall be made through the kerb as per drawings or as directed by the Engineer-in-Charge for connecting to storm water drains.

16.51.2 Finishing

Berms and road edges shall be restored and all surplus earth including rubbish etc. disposed off as directed by the Engineer-in-charge. Nothing extra shall be paid for this.

16.51.3 Measurements

It shall be measured in Running meters with Length of the finished work (for specified width and height of stone) shall be measured in running metre along the edge of the road correct to a cm.

16.51.4 Rate

The rate shall include the cost of all the materials and labour involved in all the operations described above.

Item No. 22 :

Providing and laying factory made chamfered edge Cement Concrete paver blocks in footpath, parks, lawns, drive ways or light traffic parking etc, of required strength, thickness & size/ shape, made by table vibratory method using PU mould, laid in required colour & pattern over 50mm thick compacted bed of sand, compacting and proper embedding/laying of inter locking paver blocks into the sand bedding layer through vibratory compaction by using plate vibrator, filling the joints with sand and cutting of paver blocks as per required size and pattern, finishing and sweeping extra sand. complete all as per direction of Engineer-in- Charge. 60mm thick cement concrete paver block of M-35 grade with approved colour, design & pattern.

Base

Interlocking paver block to be fixed on the bed 50 mm or specified otherwise thick of coarse sandof approved specification and filling the joints with the sand of approved type and quality or asspecifiedandasdirectedbyEngineer-in-charge.

Interlocking Paver Block

Factory made precast paver block of M-30 or otherwise specified grade to be used. Paver blocks to be of approved brand and manufacturer and of approved quality. Minimum strength as prescribed by manufacturer and as per direction of Engineer-in-Charge for the grade specified to be tested as per method mentioned in specification of subhead cement concrete of CPWD Specification 2019 Vol. I.

Measurement & Rates
Area provided with paver block to be measured in sqm. correct upto two places of decimal. The rate include the cost of the material, labour, tools etc. required in all the operations described above.

Item No: 23 :

Providing and laying gang saw cut 18 mm thick, Mirror polished / River wash pre moulded and pre polished machine cut granite stone of required size and shape of approved shade, colour and texture in footpath, flooring cut granite stone of required size and shape of approved shade, colour and texture in footpath, flooring in road side plazas and similar locations, laid over 20mm thick base of cement mortar 1:4 (1cement : 4 coarse sand) including grouting the joints with white cement mixed with matching pigment, epoxy touch ups etc. complete as per direction of Engineer-in-Charge. (Granite may be selected by the Bank having basic rate as 200 Rs/ Sqft excluding GST - For selection only. No rate rate difference shall be payable.)

Material:
Stone
The stone shall be of the type specified such as **granite, trap, limestone, sand stone, quartzite, etc.**and shall be obtained from the quarries, approved by the Engineer-in-Charge. Stone shall be hard, sound, durable and free from weathering decay and defects like cavities, cracks, flaws, sand holesinjurious veins, patches of loose or soft materials and other similar defects that may adversely affect itsstrength and appearance. As far as possible stones shall be of uniform colour, quality or texture.Generally stone shall not contain crypts crystalline silicaor chart, mica and other deleterious materialslike iron-oxide organic impurities etc.
Stones with round surface shall not be used.The compressive strength of common types of stones shall be as per Table 7.1 and the percentage of water absorption shall generally not exceed 5% for stones other than specified in Table 7.1. For **laterite this percentage is 12%.**
Table

Type of stone	**Maximum Water Absorption**	**Minimum Compressive**
	Percentage by weight	**Strength kg./sq.cm.**
Granite	0.5	1000

Note 1: Test for compressive strength shall be carried out as laid down in IS 1121 (Part I).
Note 2: Test for water absorption shall be carried out as laid down in IS 1124.

LIST OF MANDATORY TEST

Material	Clause	Test	Field/ Laboratory Test	Test	Minimum quantity of material/ work for carrying out the test	Frequencyof testing
Granite		Moisture	Laboratory	IS 1124	50 Sqm	100sqm or part thereof
		Specific Gravity	Laboratory	IS 1122	50 Sqm	100sqm or part thereof

Granite Stone

It shall be of any colour and size as directed by Engineer-in -Charge. Granite shall be plainmachine cut and mirror polished. The stone shall be smooth and of even surface without holes orpits.

SIZES AND TOLERANCES

The size of marble blocks, slabs and tiles shall be as mentioned in Table 8.1.

TABLE 8.1

SI No.	Type	Length	Width Thickness	Thickness
1.	Blocks	30 to 250	30 to 100	30 to 90
2.	Slabs	70 to 250	30 to 100	2 to 15
3.	Tiles	10 to 60	10 to 60	0.8 to 2.4

(1) All dimensions are in centimeter.
(2) The length and width, of the blocks shall be in multiple of 30 cm.
(3) Length and width of slab shall be in multiple of 10 cm. and thickness in multiple of 1 cm.
(4) Tiles shall be square cut and linear dimensions in multiple of 10 cm.
(5) Only slabs and tiles shall be machine cut and factory made.
(6) For 8 mm thick tiles, special precautions will be required for fixing them like using special adhesive as per manufacturer's specifications. Such tiles are not suitable for outside veneering work exposed to rains/sun if used in large areas in continuous stretches. For tiles of thickness 20 mm and above cramps may be provided if approved by Engineer-in-Charge

PHYSICAL PROPERTIES

The physical properties of marble for blocks, slabs and tiles and method of tests are mentioned in Table 8.2.

Physical Properties of Marble & Granite

Characteristic	Granite	IS Code
(1) Moisture absorption after 24 hrs immersion in cold water	Max. 0.50% by weight	IS 1124
(2) Hardness	-	-
(3) Specific Gravity	Min. 2.6	IS 1122

Workmanship

For dressing, each slab shall be cut to the required size and shape and fine chisel dressed at all edges. The sides thus dressed shall a have a full contact if a straight edge is laid along. The side shall be table rubbed with coarse sand before paving. All angles and edges of the slab shall be True Square and free from chipping. The thickness shall be 30mm (Av.) as specified in the item.
Bedding for the 18mm thick mirror finished granite stone shall be cement Mortar 1:4 (mortar mix specified) of Av. Thickness up to 65 mm as given in the description of the item. Sub grade shall be cleaned, wetted and mopped. The slab shall be washed clean before laying. It shall be top pressed, tapped gently to bring it in level with other slab spread on an area sufficient to receive one **20 mm thick mirror finished granite** slab. It shall then be lifted and laid aside. Top surface of the mortar shall then be corrected by adding fresh mortar at hollow depressions. Over this surface, cement slurry of honey like consistency shall be applied. The stone shall be gently placed in position and tapped with wooden mallet till it is properly padded in level with and close to the adjoining slab. The joint shall be as fine as possible. The slab fixed in the floor adjoining the wall shall enter not less than 10mm under the plaster, skirting or dado. The junction between the wall floors shall be finished neatly. The finished surface shall be true to levels and slopes as directed. The floor shall be kept wet for a minimum period of 7 days.. Curing, daily moping with water & kerosene as directed for at least 15 days after final polishing etc. complete upto the satisfaction of the Architect or Engineer-in-charge.

Mode of Measurement & Payment:
Work includes cost of material and labour with polishing complete. Measurement shall be taken between finished face of skirting, dado or wall plaster - visible top Granite stone only in length and width. Mode of Payment will be **on smt. basis** of finished work. No deduction shall be made for any opening in the floor of area 0.10 sq. mt. Rate shall be paid for a unit **of 1 sq. meter basis**.

Item No. 24 :

Providing and laying design mix cement concrete of M-30 grade, in roads/ taxi tracks/ runways, using cement content as per design mix, using coarse sand and graded stone aggregate of 40 mm nominal size in appropriate proportions as per approved & specified design criteria, providing dowel bars with sleeve/ tie bars wherever required, laying at site, spreading and compacting mechanically by using needle and surface vibrators, levelling to required slope/ camber,finishing with required texture, including steel form work with sturdy M.S. channel sections, curing, making provision for contraction/ expansion, construction & longitudinal joints (10 mm wide x 50 mm deep) by groove cutting machine, providing and filling joints with approved joint filler and sealants, complete all as per direction of Engineer-in-charge. The top surface to be furnish by vaccume dewatering process by power floater using floor hardner to achieve hard surface. Floor hardener to be used as 4-4.5 kg/Sqmtr.

Note: - Cement content shall be maintained as per IS Standard.

Specification followed as per below mentioned CPWD Items:

16.26 CEMENT CONCRETE PAVEMENT UNDER CONTROLLED CONDITIONS
16.26.1 Materials

16.26.1.1 Cement

(a) Cement used on work shall be as per sub head cement concrete of CPWD specifications-2019 (Vol. – I).

16.26.1.2 ***Water :*** Water used on work shall conform to SH: cement concrete of CPWD, Specification 2019- Vol. I.

16.26.1.3 ***Coarse Aggregate*** **:** These shall be crushed or broken from hard stones obtained from approved quarry. These shall be clean strong, durable of fairly cubical shape and free from soft, friable, thin elongated and laminated disintegrated pieces. These shall also be free from dirt, organic deleterious and any other foreign matter and adherent coatings and shall satisfy the physical requirements laid down in para 16.37.19 under quality control.

16.26.1.4 ***Fine Aggregate :*** This shall be coarse sand conforming to CPWD Specification 2019 Vol. I.

16.26.1.5 ***Grading of Mixed Aggregates :*** The grading of all aggregates (coarse and fine aggregates) to be used in the work shall be determined in the laboratory. The coarse and fine aggregates shall be mixed in suitable proportions so that the grading of the mixed aggregates shall be in the range indicated in Table 16.32.

TABLE 16.32

I.S. Sieve Size (IS 460)	*% age passing by weight*
45 mm	100
22.4 mm	55 - 60
11.2 mm	45 - 50
5.6 mm	35 - 40
2.8 mm	30 - 35
1.4 mm	20 - 25
710 microns	15 - 20
355 microns	10 - 14
180 microns	2 - 5

16.26.2 Mix Design

16.26.2.1 The mix shall be approved by Engineer-in- Charge so as to obtain the following mean strength that exceeds the minimum specified flexural strength by 1.64 times the designed standard deviation.

Minimum works beam flexural strength at 28 days	=	300 kg/sqm. for M-30 or specified in item
Designed standard deviation	=	60 kg/sqm. for M-30 or for specified grade(s)
Design flexural strength at 28 days	=	300+60x1.64
Water cement ratio by weight	=	398.4 kg/sqm. (f + 1.64 s) says 400 kg.
Water cement ratio by weight	=	0.5
Minimum slump not more than 25 mm		

16.26.2.2 For the purpose of tendering the contractor shall base his rate on the assumption that the quantity of cement used for one cum. of finished concrete shall be 340 kg. or M - 30. If the actual quantity of cement required to be used as a result of the laboratory test is different from that assumed above, necessary adjustment in the cost due to short cement used shall be made on the basis of issue rate of cement including storage charges plus 2.5% for handling charges. However, under no

circumstances the quantity of cement to be used shall either exceed 350 kg./cum or fall below 330 kg. per cum of finished concrete.

16.26.3 Statistical Field Check

16.26.3.1 Samples of concrete shall be taken at the mixer and works beams, made, cured and testedin accordance with IS 1199 and IS 516.

16.26.3.2 When a mix is used for the first time, it is important to get a large number of results, as soon as possible, in order to establish the level of control and then suitability of the mix proportions. A sample of concrete shall be taken at random on eight separate occasions during each of the first five days of using that mix. From each sample two beams shall be made one for test at 7 days and the other for test at 28 days.

16.26.3.3 The work beam results shall be examined both individually and in consecutive (but not overlapping) sets of four, for which the average and the range of each set is calculated. The mix proportions shall be modified to increase the strength, if in the first ten consecutive (but not overlapping) sets any of the following conditions are not satisfied.

(I) Each sample has a test strength not less than the minimum specified strength i.e. 30 kg/sq. cm. (or otherwise specified in item).

OR

(II) (a) Not more than two individual results (Not more than one of first twenty) of the 40 beams tests shall fall below the minimum work beam strength but they shall not be less than 80% of the specified beam strength of 30 kg./sq. cm (or otherwise specified in item) or the minimum specified strength minus 1.35 times the standard deviation whichever is greater.

(b) No value of the range in any set shall exceed 3 times the designed standard deviation.

(c) The average for all samples (10 sets) shall not be less than the minimum specified strength i.e. 30 kg/sq. cm (or otherwise specified in item) plus 1.64 times the designed standard deviation 60 kg./sq.cm M-30.

16.26.3.4 If either of these conditions (16.37.3.3 I or 16.37.3.3 II) are not satisfied, the mix shall be modified and the procedure described above shall be repeated till results satisfying the above criterias are obtained.

16.26.3.5 Subsequently samples shall be taken at the rate of one for every 30 cubic metre of concrete laid. Eight beam specimen shall constitute one sample. A set of 4 specimen shall be tested after 7 days and another set of 4 specimen shall be tested after 28 days. These test results shall be checked individually and in sets of four as the work progresses. If at any stage it is found that either of conditions 16.43.4.3,I or 16.4.3,II are not satisfied, the overall average and the standard deviation of the previous consecutive 40 beam test results including the non-complying set shall be calculated. If the overall average strength minus 1.64 times the standard deviation is more than the specified beam strength (30 kgm/sq.cm) (or otherwise specified in item) the concrete shall be accepted. But if it is less than the concrete work corresponding to these 40 beams tests shall be rejected and the mix proportion shall be modified forth with for further work. The rejected work shall be replaced by the contractor immediately at his own cost and expense.

16.26.3.6 The statistical field checks described in 16.37.3.1 to 16.37.3.2 are meant to control thequality of concrete. The standard of acceptance of concrete shall be governed by the provision of para

16.37.3.3 to 16.37.3.5.

16.26.4 Slump Test

The test shall be carried out as per IS 1199. A slump test shall be carried out at each mixer at least one in fifty batches mixed or more frequently if directed by the Engineer- in-Charge. Any batch from which slump test is being made shall not be transferred to the place of laying till the slump test has been completed. Not only the batch which gives a slumps in excess of that specified shall be rejected but the concrete already laid immediately preceding the batch tested upto the nearest last transverse joint may be rejected by the Engineer-in-Charge or his subordinate, if he is satisfied that such preceding batches were substandard in this respect. The decision of the Engineer-in-Chargein this respect shall be final and binding on the contractor. Such rejected concrete shall be removed by the contractor immediately and replaced with proper slump concrete at his cost and expense.

16.26.5 Steel Forms

16.26.5.1 All side forms shall be of mild steel. The steel forms shall be of M.S. Channel sections and their depth shall be equal to the thickness of the pavement.

16.26.5.2 The side forms shall have a length of at least 3.0 metres except on curves of less than 4.5 metres radius where shorter lengths may be used. When set to grade and stacked in place the maximum deviation of the top surface of any section from a straight line shall not exceed 3 mm. The method of connection between sections shall be such that the joint formed shall be free from play or movement in any direction. The use of bent, twisted or worn out forms shall not be permitted. At least three stake pockets for bracing pins or stakes shall be provided for each 3.0 M length of forms. Bracing and supports must be ample to prevent the springing of forms under pressure of concrete or weight or thrust of the machinery (like screed vibrator) operating on the forms. Support to the forms shall be sufficiently rigid to hold them in position during the entire operation of laying and compactingand finishing and that they shall not at any time deviate more than 3 mm from straight edge 3 metresin length. Forms which show a variation from the required rigidity of the alignment and levels shown on the plans shall be reset or removed as directed. The length and number or pins or stakes shall besuch as to maintain the forms at the correct line and grade.

16.26.5.3 The supply of forms shall be sufficient to permit their remaining in place for at least 12 hrs. after the concrete has been placed or longer, if in the opinion of the Engineer-in-Charge, it is necessary.

16.26.5.4 The top line of the forms is not to vary from the correct level or alignment and the levels and alignment of the forms are to be checked and corrected as necessary immediately prior to the placing of concrete. The top edges and faces of the forms are to be carefully cleaned and maintained in clean condition.

16.26.5.5 While removing the steel forms, care shall be taken to withdraw them gradually, any damage to the bull nosed edges shall be made good while the concrete is still green.

16.26.5.6 Setting of Forms

(a) Setting of forms shall be according to the slab plan subject to the approval of Engineer-in-Charge and concreting shall not commence until the setting of forms is approved.

(b) Forms shall be set for at least 50 metres in advance of the point where the concrete is being laid and shall not be removed until at least 12 hrs. of placing of the concrete or longer if in the opinion of Engineer-in-Charge is necessary.

(c) After setting, the working faces shall be thoroughly oiled by using approved oil before concrete is placed against them.

(d) The pavement joints of overlay layer would overlap with the joints of underlay cement concrete.

16.26.6 Batching and Mixing

As detailed in SH: 5 of reinforced cement concrete work of CPWD specifications 2019.

16.26.7 Placing of Concrete

As detailed in SH: 5 of reinforced cement concrete work of CPWD specifications 2019.

16.26.8 Compaction of Concrete

16.26.8.1 Compaction shall be carried out by electrically (or) diesel operated needle and screed vibrators as stipulated hereafter. Needle vibrator should be used all over the area for obtaining initial compaction of concrete. These should be of diameter not less than 4.5 cm. If the vibrator are pneumatic the pressure must not be below 4 kg/sq.cm. If electrically operated, they should have a minimum frequency of 3500 impulses per minute.

16.26.8.2 There should be at least three needle vibrators working in any bay. A vibrating screed consisting of a steel or timber section weighing not less than 15 kg. per metre with a tamping edge of not less than 7 cm width and having a vibrator mounted thereon shall follow needle vibrators to obtain full compaction. The face of the wooden tamping edge of the screed shall be lined with M.S. Plate rigidly fixed by means of counter sunk screw. Where screed vibrators are used for compaction,a standby unit shall always be maintained ready for use, should the other one go out of order. Where electrically driven vibrators are employed, a standby diesel pneumatic unit shall be kept ready for use in case of power failure. At the discretion of the Engineer-in-Charge, for compaction at edges and joints, vibrators may be supplemented by hand tamping and rodding for securing satisfactory results. Under no circumstances, honey combing of concrete at joints or elsewhere shall be permitted.

16. 37.8.3 When using screed vibrator for compaction it should not be dragged over the concrete. During the initial passes it shall be lifted to the adjacent forward position in short steps, subsequently, it shall be slowly slided over the surface with its axis slightly tilted away from the direction of sliding and the operation repeated until a close, dense surface is obtained.

16.37.8.4 Concreting shall be carried out in one operation between the expansion joints and construction joints without any break at the dummy joints.

16.37.8.5 Concrete shall be deposited on the base as near the joints as possible without touching them. It shall then be shoveled against the sides, maintaining equal pressure and deposited approx. 50 mm higher than the depth of the joints, care being taken that it is worked well around the joints. The concrete shall not be dumped from the bucket directly upon or against the joints.

16.37.8.6 Workmen shall not be allowed to walk on freshly laid concrete and proper cat walk shall be provided with independent supports beyond concreting bays.

16.26.9 Finishing of Concrete

16.26.9.1 During compaction, any low or high spots shall be made up by adding or removing concrete. After longitudinal floating has been completed but while concrete is still plastic, the slab surface shall be tested for trueness with a 3 m straight edge. Any depressions or high spots showing departure from the true surface shall be immediately rectified. High spots shall be cut down and refinished. Depressions shall be enlarged to about 8-10 cm and filled up with fresh concrete, compacted and finished.

16.26.9.2 The straight edge testing the refloating is to continue until the entire surface:

(a) is free from observable departure from the straight edge,

(b) conforms to the required levels and across section, and

(c) shall conform to the specified surface when the concrete has hardened.

16.26.9.3 The foregoing work is to be carried out while the concrete is still plastic and workable.

16.26.10 Belting

16.26.10.1 Just before concrete becomes non-plastic, the surface shall be belted with a two ply canvas belt not less than 20 cm wide and at least 1 metre longer than the width of the slab. Hand belts shall have suitable handles to permit controlled uniform manipulation. The belt shall be operated with short strokes transversed to the centre line of the pavement and with rapid advance parallel to the centre line.

16.26.11 Brooming

16.26.11.1 After belting and as soon as the surplus water, if any, has risen to the surface, the pavement shall be given a broom finish with an approved steel or fiber broom not less than 45 cm wide. The broom shall be pulled gently over the surface of the pavement from edge to edge. Adjacent strokes shall be slightly overlapped. Brooming shall be perpendicular to the centre line of the pavement and so executed that the corrugations formed shall be uniform in character and width and not more than 1.5 mm deep.

16.26.11.2 Brooming shall be completed before the concrete reaches such a stage that the surface is likely to be torn or unduly roughened by the operation. The broomed surface shall be free from porous or rough spots, irregularities, depressions, and small pockets such as may be caused by accidental disturbing of particles of coarse aggregates embodied near the surface. The brooming shall be of uniform pattern all through.

16. 37.11.3 ***Edging :*** After belting/brooming has been completed but before the initial setting of concrete, the edges of the slab shall be carefully finished with an edger of 6 mm radius, and the pavement edges shall be left smooth and true to line.

16.26.12 Honey Combing

16.26.12.1 The side forms shall not be removed until 12 hours or such longer period as the Engineer-in-Charge may decide after the laying of concrete.

16.26.12.2 As soon as the side forms are removed, any minor honey combed area shall be filled with mortar composed of one part of cement and two parts of fine aggregate. Major honey combing areas or segregated concrete or other defective work or areas damaged by removal of the forms or concrete damaged by rain or due to any other reason whatsoever shall be considered as defective work and shall be removed and replaced by the contractor at his own expense. The total area of honey combed surface shall not exceed 4 per cent of the area of the slab side. However, no individual honeycomb

patch shall exceed 0.1 sqm. Engineer-in-Charge's decision as to whether the concrete is defective or not shall be final and binding.

16.26.13 Surface Accuracy

16. 37.13.1 After the concrete has sufficiently hardened after about 12 hours and not later than 24 hours, the surface shall be tested again for high spots. All high spots shall be marked and those exceeding 3 mm shall be ground down immediately. Care shall be taken to see that the grinding does not in any way damage the concrete surface.

16.37.13.2 The final surface finish is to be such that when tested with a profilograh/roughness indicator/or a 3 metre long straight edge or an equivalent mechanical unevenness indicator placed anywhere within the same or adjoining slab in any direction on the surface, there shall be no variation greater than 3 mm.

16.37.13.3 If the surface irregularity exceeding 3 mm still remains despite grinding as per para 16.37.13.2 the concrete shall be removed to its full depth. The area of concrete to be removed shall be complete slab between the nearest joints, where the defective slab is less than 4.5 metres from the expansion joint, the whole area upto the expansion joint shall be removed to the full depth. The concrete so removed shall not be reused in the work. Fresh concrete shall be laid in the manner already de-scribed in above paras and shall again be subject to test for surface accuracy and other quality control measures. Nothing extra shall be paid on this account.

16.37.13.4 Every slab shall bear an impression not exceeding 3 mm in depth comprising the number allotted to the slab and the date on which it is laid. This impression shall be formed by the contractor when the concrete is green so as to leave permanent mark on setting.

16.37.13.5 Initial Curing

16.37.13.5.1 Immediately after completion of the finishing operations, the surface of the pavement shall be entirely covered with wetted burlap, cotton or jute mats. The mats used shall be of such length (or width) that as laid they shall extend at least 45 cm beyond the edges of the slab. The matsshall be placed so that the entire surface and both edges of the slab are completely covered. This covering shall be placed as soon as, in the judgment of the Engineer- in-Charge the concrete has set sufficiently to prevent damage to the surface prior to being placed, the mats shall be thoroughly saturated with water and shall be placed with the wettest side down. The mats shall be so placed and weighed down as to cause them to remain in intimate contact with the surface covered, and the covering shall be maintained full wetted and in position for 24 hours after the concrete has been placed or until the concrete is sufficiently hard to be walked on without suffering damage. Water shallbe gently sprayed so as to avoid damage to the fresh concrete. If it becomes necessary to remove a mat for any reason, the concrete slab shall not be exposed for a period of more than half an hour.

16.37.13.5.2 Worn burlap or burlap with holes shall not be permitted. Burlap reclaimed from previoususe other than curing concrete shall be thoroughly washed prior to use for curing purposes. If burlap is obtained in strips, shall be laid to overlap by at least 150 mm.

16.26.14 Burlap shall be placed from suitable bridges. Walking on freshly laid concrete to facilitate placing burlap shall not be permitted.

16.26.15 Final Curing

16.26.15.1 Upon the removal of the burlaps, the slab shall be thoroughly wetted and then cured

as follows:-

All joints shall be filled with filler in order to prevent the edges of joints from getting damaged and entry of clay materials into the joints during final curing. Exposed edges of the slab shall be banked with a substantial berm of earth. Upon the slab shall then be laid a system of transverse and longitudinal dykes of clay about 50 mm high immediately covered with a blanket of sandy soil free from stones to prevent the drying up and cracking of clay. The rest of slab shall then be covered with sufficient sandy soil so as to produce a blanket of earth not less than 40 mm deep after wetting. The earth covering shall be thoroughly wetted while it is being placed on the surface and against the sides of the slab and kept thoroughly saturated with water for 21 days and thoroughly wetted down during themorning of the 22nd day and shall thereafter remain in place until the concrete has attained the required strength and permission is given by the Engineer-in-Charge. Thereafter the covering shall be removed and the pavement cleaned and swept. If the earth covering becomes displaced during the curing period, it shall be replaced to the original depth and resaturated.

16.26.15.2 Contractor shall appoint chowkidars at his expense to prevent workmen, cattle, etc., straying on the pavement concrete.

16.26.15.3 Concrete shall not be subjected to any load or weight of any plant until at least 28 days after laying.

16.26.16 Construction Joints

16.26.16.1 Construction joints shall be provided as shown in the drawing and also at places where concreting is stopped due to unforeseen circumstances. The joints shall be straight and vertical through the full thickness of the slab. While concrete in adjacent bay is still green, flats of suitable size shall be drawn along the edge and a groove of size 10 mm × 25 mm deep shall be neatly formed and finished. The edges of the groove shall be full nosed. After curing of concrete is complete, this

groove shall be thoroughly cleaned of all sand dust and shall be perfectly dried and filled with hot poured sealing compound conforming to grade B of IS 1834. Before filling with sealing compound the faces of concrete of the joint shall be coated with primer of approved brand to a depth of 25 mm at the rate of 2.6 liters per 10 square meters. Bitumen emulsion shall not be used as primer.

16.26.17 Dummy Joints

16.26.17.1 The joints shall be 10 mm wide and shall extend vertically from the surface of the slab to a depth equal to 1/3rd of the thickness of the slab but not less than 4 cm in any case. The joint may be formed by depressing into the soft but compacted concrete a high tensile M.S. or other approved Tee of flat bar of depth not less than required depth of the joint plus 25 mm. The bar used for formingthe groove shall be coated with soft soap or other suitable lubricant to facilitate its removal when the steel Tee or flat is removed joints shall be neatly formed with proper tools and mortar/fine material from the slab itself. No additional cement mortar (rich or otherwise) shall be used.

16.26.17.2 Cutting or sawing by a saw mounted on a movable frame and driven mechanically shall also be permitted as a method for making the joint. In this case the width may be reduced to 6 mm. any other method for making joints can be followed with the prior approval of the Engineer-in-Charge.

16.26.17.3 In all cases, except where cutting is done with saw, the joint edges shall be bullnosed. Care should be taken to see that the edges of the grooves are not damaged.

16.26.17.4 The grooves shall be filled with hot poured sealing compound conforming to Grade B of IS:1834. Prior to filling with sealing compound, the joints shall be cleaned by compressed air and primed with Shalijet primer or equivalent at the rate specified in Para 16.37.16.1

16.26.17.5 All joints shall be sealed as soon as practicable after 28 days of casting of cc pavement. Joints shall be sealed flush with the adjacent pavement surface in summer and 3-4 mm below finished concrete surface in winter. The pavement shall be opened to traffic only after joint sealing over the entire pavement. To prevent tackiness or pickup under traffic, the exposed surfaces of the sealing compound shall be dusted with hydrated lime, if directed by Engineer-in-Charge, for which nothing extra shall be paid to the contractor.

16.26.17.6 In case of sudden rain or storm, the work can be concluded at the dummy joints but these will then be formed as construction joints.

16.26.17.7 Before sealing of joints, it may be ensured that the groove extends fully across the bay between consecutive longitudinal joints, in the case of transverse joints and is continuous in the case of longitudinal joints. Any concrete or other foreign matter must be removed from the groove.

16.26.18 Concreting during Rains

16.26.18.1 To prevent damage to freshly laid concrete during monsoon, or sudden rains, the contractor shall provide an adequate supply of tarpaulins or other water proof covering material. Any concrete damaged by rain shall be removed and replaced by the contractor at his own cost as directed by the Engineer-in-Charge.

16.26.19 Quality Control

The following quality control tests shall be carried out at frequencies specified against each as in Table 16.33.

TABLE 16.33

S.No	*Test*	Test Method	Frequency	Acceptance Criteria
1	2	3	4	5
(i) COARSE AGGREGATE				
(a)	Flakiness index	IS 2386 (Pt.1)	Before approval of the quarry and at every subsequent change in the source of supply and one test per 100 cum of aggregates	Not more than 15%
(b)	Impact value	IS 2386 (Pt.4)	-do-	Not more than 30%
(c)	Los angles abrasion value.	IS 2386 (Pt.4)	-do-	Not more than 40%
(d)	Deleterious materials.	IS 2386 (Pt.2)	Before approval of the quarry and at every subsequent change in the source of supply	As per table 1 of IS 383

(e)	Moisture content.	IS 2386 (Pt.3)	Regularly as required subject to a min. one test per day	-do-
(ii) FINE AGGREGATES				
(a)	Silt content.	CPWD specifications 2019, Vol. I, SH: CC	One test per 15 cum	Not more than 8%
(b)	Gradation of sand	IS 2386 (Pt.1)	-do-	Fineness modulus between 2.5 to 3.9
(c)	Deleterious materials.	IS 2386 (Pt.2)	Before approval of the quarry and at every subsequent change in the source of supply	As per table 1 of IS 383
(d)	Moisture content.	IS 2386 (Pt.3)	Regularly as required subject to a min. 2 test/day	-do-
(iii) MIXED AGGREGATES				
(a)	Grading	IS 2386 (Pt. 1)	1 test per 15 cum	As per para 16.37.1.5
(iv)	Slump test of concrete	IS 1199	At least once in 50 batches at each mixer or more frequently if directed by the Engineer-in-Charge	Not more than 25 mm
(v)	Flexural strength	IS 516	One test of sample consisting of eightspecimen for every 30 cumof concrete	As per para 16.37.3.5.
(vi)	Surface accuracy	As prescribed	Regularly	As per para 16.37.13

16.26.20 Equipments

16.26.20.1 Equipments as per list at Appendix C shall be provided by the contractor in the field testing laboratory. Nothing extra shall be paid to him on this account. Records as required shall be maintained at site. All tests details in support of mix design shall be maintained as part of records of the contract and shall be signed both by the contractor and the Engineer-in-Charge. The contractor shall provide all labour, materials and equipment required for all tests to be carried out at his own cost.

16.26.20.2 The Engineer-in-Charge reserves the right to test any part of concrete laid regarding quality soundness, compactness, thickness, strength and finish of the concrete, at any time before the expiry of the "Defect liability period" not withstanding that necessary tests had been carried out and found satisfactory at the time of execution.

All defective unsound sub-standard work and concrete of sub-standard strength and quality etc. as established vide paras 16.37.3 shall be rejected and shall be replaced by the contractor at his own expense in the manner as detailed in para 16.37.3. Where due to operational or any otherreason such replacement does not become possible (decision of Engineer-in-Charge in this respect being final and binding on the contractor), the cost of removal and replacement of such rejected work shall be recovered from the contractor whether such rejected work is subsequently replaced by the Government or not.

Vacuum: Immediately after leveling, the concrete shall be covered with filter pads and suction mats in strict accordance with the recommendation of the manufacturer to have the fully dewatered. A vacuum should be applied to the mat. The vacuum shall be maintained for at least 3 minutes per inch of concrete thickness. The suction mats and filter pads shall then be removed to the next section in

leapfrog manner.

Floating: Upon removal of the suction mats and filter pads the concrete surface shall be power floated without any delays until all imprints from the vacuum process are removed. The higher speed is recommended for the floating process. Two passes with the floating disc should be made in the junction of two mats in order to avoid risk for cracking.

Finishing: The waiting time after the floating operation depends on concrete temperature and humidity and varies from 10 minutes to 2 hours. The trowelling operation cannot take place before the concrete hardened enough to carry the machine. i. e. the trowelling blades will not leave any marks on the concrete. Repeated troweling with the intervals between the passes, which are adapted to the setting of the concrete, greatly improves the surface characteristics. At least two passes are recommended.

Curing: Vacuum dewatered concrete should be cured like any other quality concrete in order to achieve a good final result with ponding.

16.26.21 Measurements

16.26.21.1 For the purpose of ascertaining the quantity of concrete in the pavement, thickness shall be measured by means of a scale correct to the nearest 2 mm. The thickness of the concrete pavement slabs shall be taken on either side of the pavement at each dummy joint at four corners of the slab immediately after removal of the side forms. In case the average thickness of the slab exceeds the specified thickness, payment shall be restricted to the specified thickness.

16.26.21.2 The dimensions of each slab of pavement shall be measured as follows to the nearest 5 mm.

(a) Length

(i) Between the end of a pavement to the centre line of the expansion joints.

(ii) Between the centre lines of consecutive expansion joints.

(b) Width

(i) Between the edge of a pavement and the centre line of the construction joints.

(ii) Between the centre lines of construction joints and expansion joints.

(iii) Between the centre lines of consecutive construction joints.

Note : The quantity of concrete in the pavement slab shall be worked out by multiplying the area of the slab and its average thickness or specified thickness whichever is less. No deduction shall be made for any joints in the concrete slab.

16.26.21.3 Measurements of concrete slabs shall be recorded jointly by the Engineer-in-Charge or his authorised subordinate and the contractor or his authorised agent.

16.26.22 Rate

The rate of the item for concrete in pavement shall include the cost of all materials and labour including charges for machinery tools & plants required in all the operations described above. The rate also includes all cost of setting up the laboratory at site and carrying out the quality control measures/tests enumerated above by the contractor at his own cost in the presence of Engineer-in-Charge or his authorized representative and submission of test results on completion of tests to the Engineer-in-Charge thereof.

Mode of Measurment: Rate shall be payable as Cum.

Item No. 25:

GI Portable Shop Cabin (Size - 6'X 6' X 8.6) , Window with grill and canopy - 4 Nos, Main door - 01 - MCB-01, Main Elect Board - 01, LED Light - 2, Fan - 1 , Bulkhed - 01 , 6Amp Charging Points - 2 , A/C Provision - 1.

General:

Techinical Specification		
Sr. No	**Components**	**Description**
1	Bottom Frame	100 mmx 50 mm I Beam (IS – 2062)
2	Top Frame	50 mm X 50 mm I MS Sq. Pipes (IS – 1161)
3	Stiffener Bottom	100 mmx 50 mm I Beam (IS – 2062)
4	Stiffener Top	40 x 20 MS Sq.Pipe (S – 1161)
5	Side Post	60 mm X 60 mm I MS Sq. Pipes (IS – 1161)
6	Paneling Outside	GI sheet – 1.2 mm with ACP Finish (IS – 2062)
7	Internal Wall Paneling	8 mm MDF ply
8	Roof Outside	GI sheet – 1.2 mm Thick Properly Sloped and water tight. (IS – 2062)
9	Out side ACP	4 mm ACP Sheet
10	Fasle Ceiling	8mmMDF – Plane White
11	Bottom Flooring	18 mm Cement Sheet with Vinyl Carpet
12	Door	Door with MS Structure 40 ‘ x 40’ ,GI sheets , Sq. Pipe ACP sheet Finish
13	Insulataion	Glass wool density of 16 kg/m^3 (Side wall – 50 mm) , (Ceiling – 25 mm)
14	Wiring	All wiring shall be conealed typer & shall be PVC insulated cooper wire.
15	Electrical Fittings	• All electrical fittings in the Portable Cabin shall be 220 – 240 V, AC 50 Hz • Tube,Door Light, Fan, Switches, Sockets,Air Conditioners poits (MCB) (All Type of window Air Conditioing Systems as desiredupon can be installed. (All Electrical Iteam Anchor, or Roma, Wire Polycab)
16	Earthing	Earthing Point Shall be Provided for Safety
17	Outside Panting	Painting with 1 Coat pf Epoxy primer with Two coat of Epoxy Paint.
18	Legs	6 –inch height, Four Legs at all four corners
19	Hooks	Specially formed Hooks for Easy lifting and shifting

Mode of Measurment: Rate shall be payable as Nos.

Item No. 26:

Construction of Water Trench: 600mm (w) x 450mm (D).
Construction of cast in situ water trench as per specified water trench at required location from Ready Mix Concrete Grade of M-25 for vertical pardi (150mm) & Bottom raft (125mm) which much be laid on 100mm thick PCC Bed of grade M-15. Trench shall have perforated cover with frame. Trench shall be finish with inside with plaster (1:4) & neat cement neru finishand with cement vata. Rate shall be inclusive of required excavation, back filling with compaction, leveling, PCC (100 mm), RCC for Raft, Pardi, reinforcement, precast cover, plaster & weather proof paint & all required tool, tackle, material, resources & manpower. Rate shall be payable as RMt uni.

General:

Relevant works specification for Earthwork, PCC, and RCC & Reinforcement work will be executed as per revelent tender specification.

Mode of Measurment: Rate shall be payable as RMt unit.

Item No. 27:

Construction of Water Trench: 600 mm (w) x 610 mm (D).
Construction of cast in situ water trench as per specified water trench at required location from Ready Mix Concrete Grade of M-25 for vertical pardi (150mm) & Bottom raft (125mm) which much be laid on 100mm thick PCC Bed of grade M-15. Trench shall have perforated cover with frame. Trench shall be finish with inside with plaster (1:4) & neat cement neru finishand with cement vata. Rate shall be inclusive of required excavation, back filling with compaction, leveling, PCC (100 mm), RCC for Raft, Pardi, reinforcement, precast cover, plaster & weather proof paint & all required tool, tackle, material, resources & manpower. Rate shall be payable as RMt unit.

General:

Sepcification as per Item No.26

Mode of Measurment: Rate shall be payable as RMt unit.

Name of Work : Civil & Allied Works at Baroda Apex Academy Building, Law Garden Ahmedabad

Make of Material to be used

Sr.No.	MATERIAL	COMPANY (Brand name)
1	Cement	Ultratech, Ambuja, JK, Birla ,Wonder
2	Steel (R/f, Structural)	Vizag, Tata, Sail,ET TMT
3	GI Pipes & Fittings	Asian, Surya, Tata, Zindal, All GI Fitting should be of ISI Brand
4	Waterproofing Compound	Pidilite, Dubond, Fosrock, Kerakoll, BASF
5	Cement Paint / Acrylic Paint	Snow Cem, Indo Cem, Asian, jotun, Burger
6	Texture Paint	Asian, , Dulux, Jotun, Luxture, Burger
7	Enamel Paint	Asian, Nerolac, , Dulux, Burger
8	Distemper	Asian, Nerolac, , Dulux, Burger
9	Floor Hardener	Sicca, Forse rock
10	Wall Putty	Birla, JK
11	Adhesive	Pidilite, Bluecoat, Eurobond
12	Weather Sealent	KERAKOLL, DOWNCORNING , FOSROC, HILTI, PIDILITE, WACKER , Dr.FIXIT
13	Epoxy Grouting	DUBOND, KERAKOLL, HILTI, BAL ENDURA , K2
14	Lighting Arrestor	OBBO, MAP, ABB
15	Aviation Light	Bajaj, Cropmpton, Phillips